Neousys Technology Inc.

FLYC-300 Series

User Manual

v1.3

Table of Contents

Table of Contents **2**
Legal Information **3**
Contact Information **4**
Notices **5**
Safety Precautions **6**
Service and Maintenance **7**
ESD Precautions **7**
About This Manual **8**

1 Introduction

1.1 FLYC-300 Specification **10**
1.2 Dimensions of FLYC-300 Series **12**
1.2.1 Bottom View 12
1.2.2 I/O Panel View 12

2 Setting Up Your FLYC-300

2.1 Unpacking Your FLYC-300 system **13**
2.2 I/O Panel **14**
2.2.1 XT-30 DC Input 15
2.2.2 Gigabit Ethernet Port 16
2.2.3 2.5Gb Ethernet 17
2.2.4 USB 3.2 Gen 1 Port 18
2.2.5 USB 3.2 Gen 2 Port 18
2.2.6 FAKRA Z Connector 19
2.2.7 DisplayPort 20
2.2.8 microSD Card Slot 21
2.3 Onboard I/O **22**
2.3.1 Onboard I/O Connectors 1 & 2 Pin Definition 23
2.3.2 Onboard I/O Connectors 3 & 4 Pin Definition 24
2.3.3 Onboard I/O Connectors 5 & 6 Pin Definition 25
2.3.4 Onboard I/O Connectors 7 & 8 Pin Definition 26
2.4 Onboard NVIDIA Jetson Orin NX Module **27**
2.5 Onboard M.2 2230 M Key Slot for NVMe SSD **28**
2.6 Onboard M.2 3042/3052 B Key Slot with SIM **30**
2.7 CAN Termination **32**
2.8 DIP Switch **33**

3 Installation

3.1 Disassembling the System **34**
3.2 NVIDIA Jetson SoM **38**
3.3 M.2 2230 M Key NVMe SSD Installation **40**
3.4 M.2 3042/3052 B key Module With SIM Slot Installation **41**
3.5 Reinstalling the Enclosure **43**
3.6 Fan Kit Installation (Optional) **46**
3.7 Mounting the System **49**
3.7.1 Mounting Inside an Enclosure 49
3.7.2 Mounting Outside of an Enclosure 50

4 Reflashing the System

Legal Information

All Neousys Technology Inc. products shall be subject to the latest Standard Warranty Policy.

Neousys Technology Inc. may modify, update or upgrade the software, firmware or any accompanying user documentation without prior notice. Neousys Technology Inc. will provide access to these new software, firmware or documentation releases from download sections of our website or through our service partners.

Before installing any software, applications or components provided by a third party, customer should ensure that they are compatible and interoperable with Neousys Technology Inc. product by checking in advance with Neousys Technology Inc.. Customer is solely responsible for ensuring the compatibility and interoperability of the third party's products. Customer is further solely responsible for ensuring its systems, software, and data are adequately backed up as a precaution against possible failures, alternation, or loss.

For questions in regards to hardware/ software compatibility, customers should contact Neousys Technology Inc. sales representative or technical support.

To the extent permitted by applicable laws, Neousys Technology Inc. shall NOT be responsible for any interoperability or compatibility issues that may arise when (1) products, software, or options not certified and supported; (2) configurations not certified and supported are used; (3) parts intended for one system is installed in another system of different make or model.

Contact Information

Headquarters (Taipei, Taiwan)	**Neousys Technology Inc.** 15F, No.868-3, Zhongzheng Rd., Zhonghe Dist., New Taipei City, 23586, Taiwan Tel: +886-2-2223-6182 Fax: +886-2-2223-6183 Email, Website
Americas (Illinois, USA)	**Neousys Technology America Inc.** 3384 Commercial Avenue, Northbrook, IL 60062, USA Tel: +1-847-656-3298 Email, Website
China	**Neousys Technology (China) Ltd.** Room 612, Building 32, Guiping Road 680, Shanghai Tel: +86-2161155366 Email, Website

Notices

Copyright	All rights reserved. This publication may not be reproduced, transmitted, transcribed, stored in a retrieval system, or translated into any language or computer language, in any form or by any means, electronic, mechanical, magnetic, optical, chemical, manual or otherwise, without the prior written consent of Neousys Technology, Inc.
Disclaimer	This manual is intended to be used as an informative guide only and is subject to change without prior notice. It does not represent commitment from Neousys Technology Inc. Neousys Technology Inc. shall not be liable for any direct, indirect, special, incidental, or consequential damages arising from the use of the product or documentation, nor for any infringement on third party rights.
Patents and Trademarks	Neousys, the Neousys logo, Expansion Cassette, MezIO™ are registered patents and trademarks of Neousys Technology, Inc. Windows is a registered trademark of Microsoft Corporation. Intel®, Core™ are registered trademarks of Intel Corporation NVIDIA®, GeForce® are registered trademarks of NVIDIA Corporation All other names, brands, products or services are trademarks or registered trademarks of their respective owners.
FCC Conformity	This equipment has been tested and found to comply with the limits for a Class A digital device, pursuant to part 15 of the FCC Rules. These limits are designed to provide reasonable protection against harmful interference when the equipment is operated in a commercial environment. This equipment generates, uses, and can radiate radio frequency energy and, if not installed and used in accordance with the instruction manual, may cause harmful interference to radio communications. Operation of this equipment in a residential area is likely to cause harmful interference in which case the user will be required to correct the interference at his own expense.
CE Conformity	The product(s) described in this manual complies with all applicable European Union (CE) directives if it has a CE marking. For computer systems to remain CE compliant, only CE-compliant parts may be used. Maintaining CE compliance also requires proper cable and cabling techniques.

Safety Precautions

Read these instructions carefully before you install, operate, or transport the system.

- Install the system or DIN rail associated with, at a sturdy location
- Install the power socket outlet near the system where it is easily accessible
- Secure each system module(s) using its retaining screws
- Place power cords and other connection cables away from foot traffic.
- Do not place items over power cords and make sure they do not rest against data cables
- Shutdown, disconnect all cables from the system and ground yourself before touching internal modules
- Ensure that the correct power range is being used before powering the device
- Should a module fail, arrange for a replacement as soon as possible to minimize down-time
- If the system is not going to be used for a long time, disconnect it from mains (power socket) to avoid transient over-voltage

Service and Maintenance

- ONLY qualified personnel should service the system
- Shutdown the system, disconnect the power cord and all other connections before servicing the system
- When replacing/ installing additional components (expansion card, memory module, etc.), insert them as gently as possible while assuring proper connector engagement

ESD Precautions

- Handle add-on module, motherboard by their retention screws or the module's frame/ heat sink.
- Avoid touching the PCB circuit board or add-on module connector pins
- Use a grounded wrist strap and an anti-static work pad to discharge static electricity when installing or maintaining the system
- Avoid dust, debris, carpets, plastic, vinyl and styrofoam in your work area.
- Do not remove any module or component from its anti-static bag before installation

About This Manual

This user manual introduces the basic input/ output connections of Neousys Technology's FLYC-300 series, an ultra-light and compact drone computer.

Revision History

Version	Date	Description
1.0	Sep. 2024	Initial release
1.1	Dec. 2024	Updated: • Power LED (connector 8) pin definition • Instructions on installing SparkLAN WNFQ-262ACNI(BT) M.2 B key module
1.2	Jul. 2025	Updated XT-30 polarity information
1.3	Dec. 2025	Updated Ethernet specifications

1 Introduction

Neousys FLYC-300 is an NVIDIA Jetson Orin NX based mission computer tailor-made for drone and UAV applications. Designed to coincide and collaborate with the flight controller that is responsible for stabilizing and controlling drone's flight, FLYC-300 fuels compelling 100 TOPS AI performance combining versatile sensors to empower true autonomy of drone and advance applications such as autonomous navigation, obstacle avoidance, object detection and tracking.

FLYC-300-EC (with enclosure)

FLYC-300 (without enclosure)

Catering to the diverse needs of cameras and sensors like RGB, hyperspectral, infrared, LiDAR, and 3D cameras, FLYC-300 boasts a versatile array of connectivity options, including two Ethernet, two USB3.2, and two GMSL2 ports. Making it ideal for real-time video analytics applications such as drone imagery collection, surveillance, infrastructure monitoring. To command the flight of drone, FLYC-300 can communicate seamlessly with the flight controller through configurable UART, Ethernet, and CAN ports. It also accommodates a wide voltage input range from 4S to 14S battery packs via the XT30 DC-IN connector. The system is compatible and supports installation of 5G/ 4G modules for real-time transmission of images, videos, and data.

FLYC-300 can elevate unmanned systems to another level by combining vision devices with a powerful NVIDIA Jetson-based AI platform. Intelligent autonomous UAV systems can deliver enhanced operational effectiveness, risk reduction, and real-time information, making them a valuable repertoire. With its 297 grams ultra-lightweight design, versatile connectivity, FLYC-300 is ready for integration and deployment into real-world applications.

1.1 FLYC-300 Specification

System Core	
Processor	NVIDIA® Jetson Orin™ NX system-on-module (SOM), comprising NVIDIA® Ampere GPU and ARM Cortex CPU
Memory	8GB/ 16GB LPDDR5 @ 3200 MHz on SOM
External I/O Interface	
GMSL2	2x GMSL2 FAKRA Z connector, supporting 2x 1920x1080 @ 60 FPS or 1x 2880x1860 @ 30 FPS camera input
Ethernet	1x Gb Ethernet port by NVIDIA 1x 2.5Gb Ethernet port by Intel® I226-IT/ I225-IT
USB	1x Type A USB 3.2 Gen2 (10 Gbps) ports 1x Type A USB 3.2 Gen1 (5 Gbps) ports 1x Type C port reserved for original manufacturing purposes
SD Card	1x microSD card slot
Video Port	1x DisplayPort
Internal I/O Interface	
USB	1x USB 2.0
CAN Bus	1x CAN bus 2.0
I2C	I2C
GPIO	Isolated 2x DI, 4x DO
UART	1x UART
Storage Interface	
M.2	1x M.2 2230 M key socket NVMe interface (Gen4 x4)
Expansion Bus	
M.2	1x M.2 3042/3052 B key with internal micro SIM socket
Power Supply	
DC Input	XT-30 for 12V to 60V DC input, supports 4S-14S battery packs
Mechanical	
Dimension	124mm x 123mm x 30.5mm (Including enclosure)
Weight	297g (Excluding enclosure) 345g (Including enclosure)
Mounting	Wall mount
Fan	Optional external-accessible 65mm x 65mm fan for system heat dissipation
Environmental	
Operating Temperature	

Temperature*	Heat Spreader Attachment	Compatible Battery Pack
-25°C to 40°C	Not required	4S-14S
-25°C to 60°C	Required**	4S-14S
-25°C to 70°C	Required**	4S-6S

* For sub-zero operating temperature, a wide temperature SSD is required.

** Conduction must be utilized by securing the FLYC's heat spreader to a metallic

	surface. For installation details, please refer to the section.
Storage Temperature	-40°C to 85°C
Humidity	10%~90%, non-condensing
Vibration	Operating, MIL-STD-810H, Method 514.6, Category 4
Shock	Operating, MIL-STD-810H, Method 516.6, Procedure I, Table 516.6-II
EMC	CE/FCC Class A, according to EN 55032 & EN 55035

* For sub-zero operating temperature, a wide temperature NVMe is required.

1.2 Dimensions of FLYC-300 Series

> NOTE
>
> *All measurements are in millimeters (mm).*

1.2.1 Bottom View

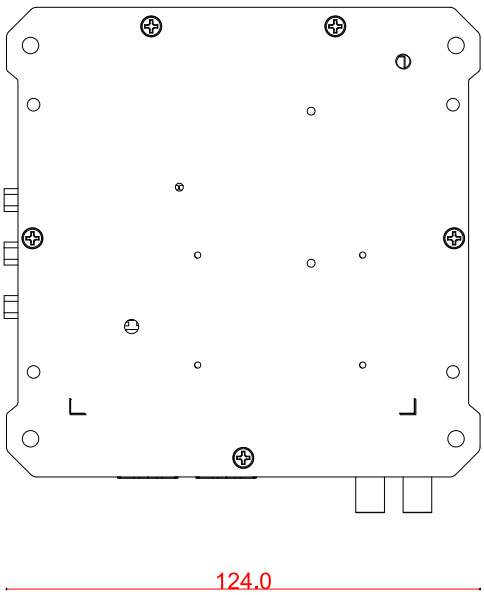

FLYC-300-EC (with enclosure)

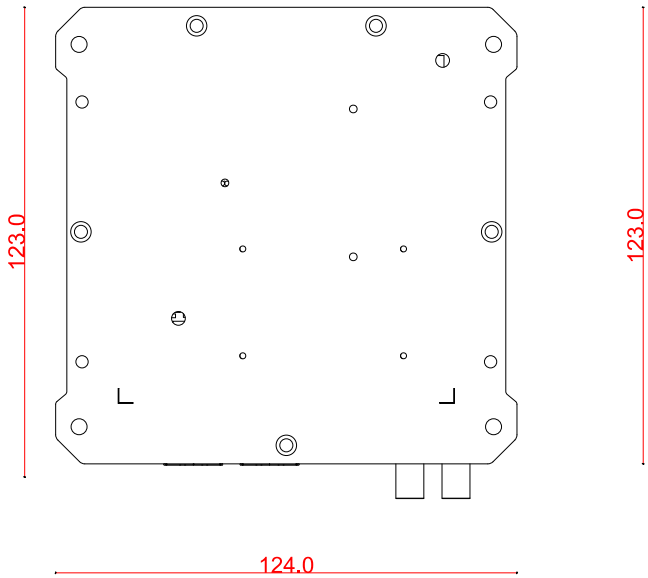

FLYC-300 (without enclosure)

1.2.2 I/O Panel View

> NOTE
>
> *All measurements are in millimeters (mm).*
>
> *The 32.0mm height (with enclosure) does not include the thickness of the thermal pad.*

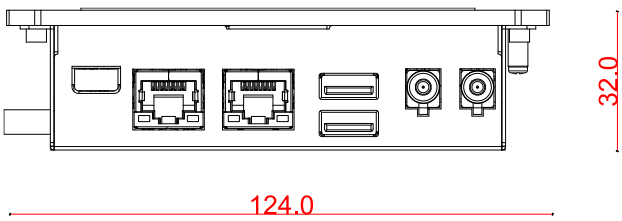

FLYC-300-EC (with enclosure)

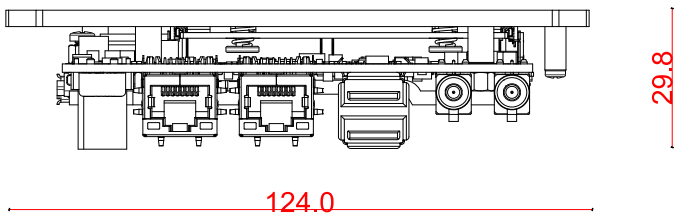

FLYC-300 (without enclosure)

2 Setting Up Your FLYC-300

2.1 Unpacking Your FLYC-300 system

Upon receiving the FLYC-300 system, please check immediately if the package contains all the items listed in the following table. If any item is missing or damaged, please contact your local dealer or Neousys Technology.

Item	Description	Qty
1	FLYC-300 system	1
2	XT-30 power cable, 20cm	1
3	Screw pack	1

2.2 I/O Panel

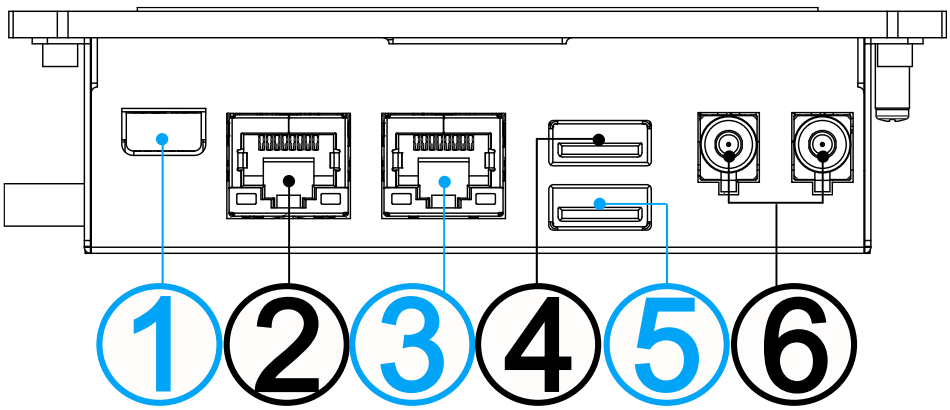

No.	Item	Description
1.	XT-30 DC input	A compact and high-power efficient transfer connection often applicable for battery pack.
2.	Gigabit Ethernet	The Gigabit Ethernet port is provided by the NVIDIA SoM.
3.	2.5Gb Ethernet	The 2.5Gb Ethernet port by is provided by Intel® I225-IT.
4.	USB 3.2 Gen 1 ports	USB 3.2 Gen 1 offers up to 5Gbps of data-throughput performance. They are backward compatible with USB2.0.
5.	USB 3.2 Gen 2 ports	USB 3.2 Gen 2 port (SuperSpeed+) offers up to 10Gbps, twice the bandwidth over existing SuperSpeed USB3.1 Gen. 1 connection. They are backward compatible with USB3.2 Gen1 and USB2.0.
6.	FAKRA Z connectors	There are two FAKRA Z connectors to connect to GMSL2 cameras.

2.2.1 XT-30 DC Input

NOTE

Please note the polarity of the XT-30 connector.

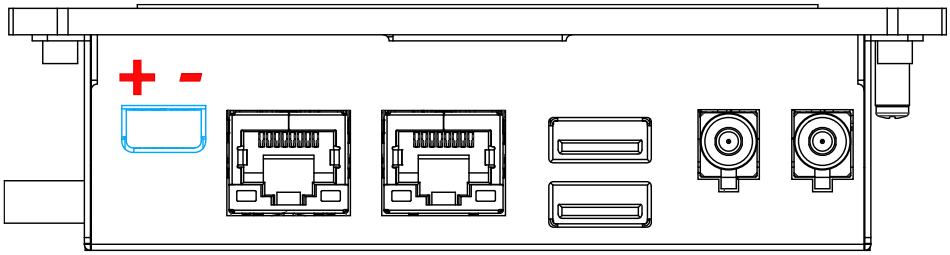

The XT-30 DC input connector supports 12V to 60V and is compatible with a 4S – 14S battery pack. The XT-30 is a popular and common choice in the realm of drone electronics and remote-controlled vehicles for its compact size and efficient power transfer capabilities. Designed for high-current applications, it features a plug and socket configuration, with the male plug featuring protruding pins that fit snugly into the female socket. This design ensures a secure connection while minimizing the risk of accidental disconnection during operation.

The XT-30 connector is capable of handling significant power loads, making it ideal for use in drones, RC cars, boats, and other electronic devices requiring reliable power delivery. Additionally, the XT-30 connector is designed with user convenience in mind, featuring easy-to-use connectors that can be quickly plugged and unplugged without the need for specialized tools. This makes it particularly popular among hobbyists who often need to swap out batteries or components during their projects.

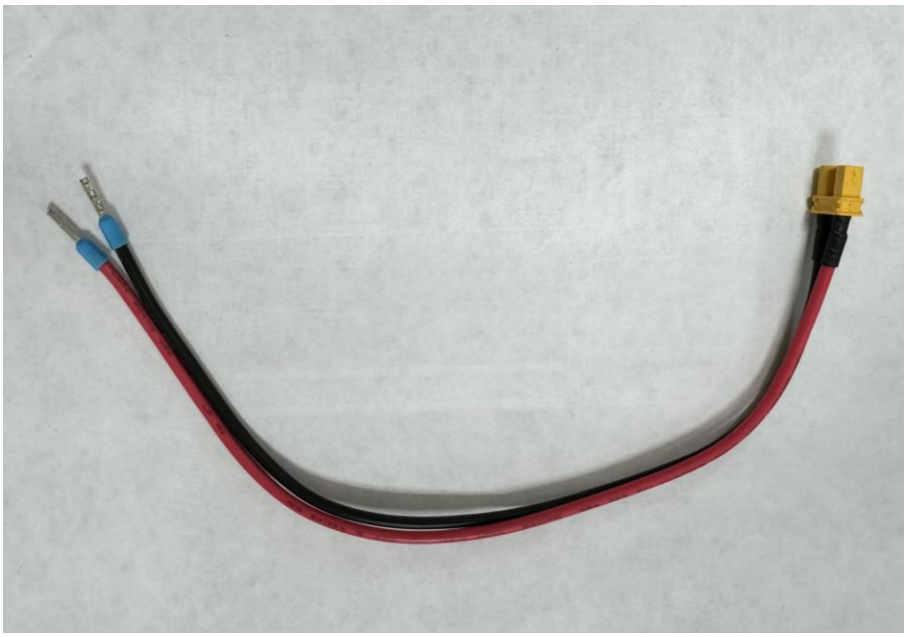

XT-30 cable, 20cm

2.2.2 Gigabit Ethernet Port

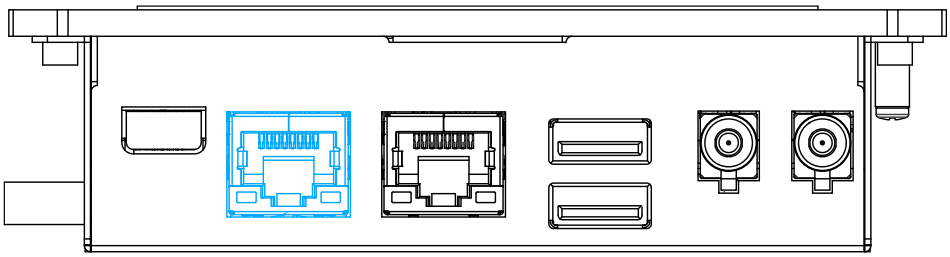

The system offers a Gigabit Ethernet port on its I/O panel. When an Ethernet connection is established, the LED indicators on the RJ45 connector represents the following connection statuses:

Active/Link LED (Right)

LED Color	Status	Description
Off or Yellow	Off	Ethernet port is disconnected
	On	Ethernet port is connected and no data transmission
	Flashing	Ethernet port is connected and data is transmitting/receiving

Speed LED (Left)

LED Color	Status	Description
Off or Orange	Off	10/ 100 Mbps
	Orange	1000 Mbps

2.2.3 2.5Gb Ethernet

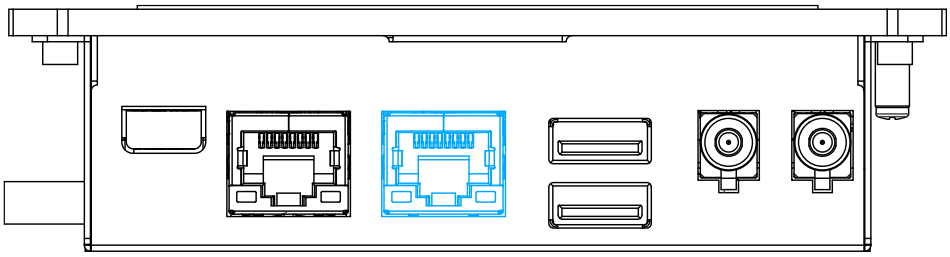

The system offers two 2.5Gb Ethernet ports using Intel® I225-IT controller. When plugged in and connected via the Ethernet cable, the LEDs on the RJ45 connector indicate connection status and speed.

Active/Link LED (Right)

LED Color	Status	Description
Off or Yellow	Off	Ethernet port is disconnected
	On	Ethernet port is connected and no data transmission
	Flashing	Ethernet port is connected and data is transmitting/receiving

Speed LED (Left)

LED Color	Status	Description
Off, Green or Orange	Off	10 Mbps
	Green	100 Mbps
	Orange	1000/ 2500 Mbps

2.2.4 USB 3.2 Gen 1 Port

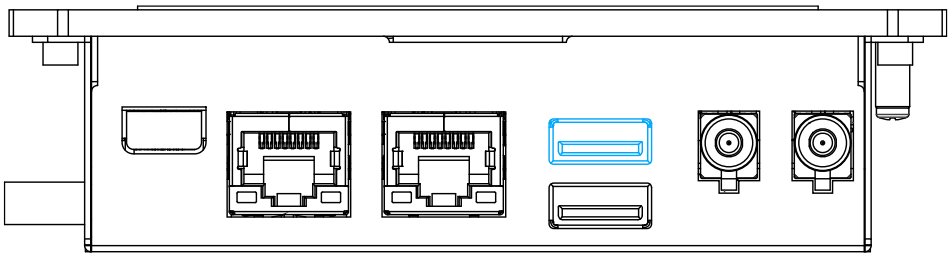

The system's USB 3.2 Gen1x1 port (5Gbps) is backward compatible with USB 2.0, USB 1.1 and USB 1.0 devices.

2.2.5 USB 3.2 Gen 2 Port

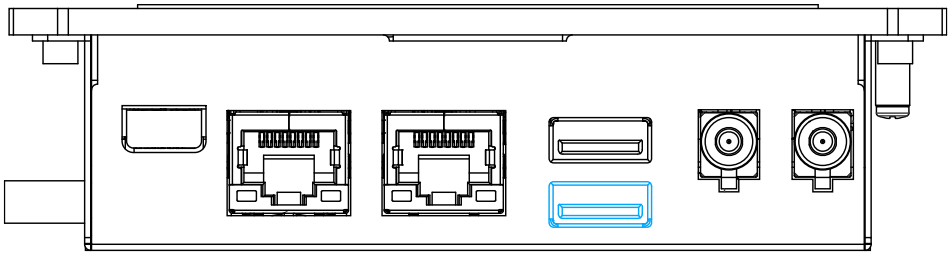

The system's USB 3.2 Gen2x1 port (10Gbps) is backward compatible with USB3.2 Gen1, USB 2.0, USB 1.1 and USB 1.0 devices.

2.2.6 FAKRA Z Connector

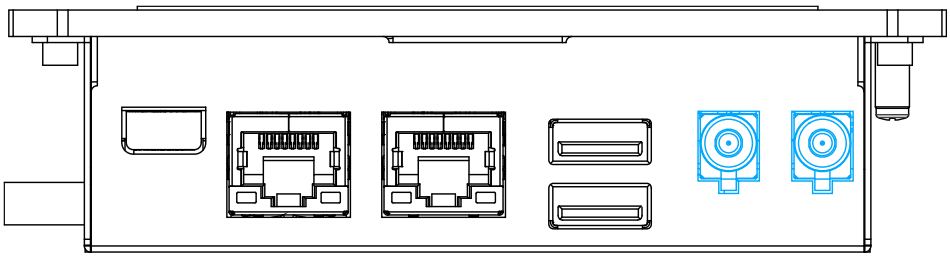

Fachkreis Automobil (FAKRA) connector is a German standard for SubMiniature version B based automotive-grade connectors. There are two FAKRA Z connectors on the front side of FLYC-300 to connect to automotive GMSL2 cameras.

Due to their advanced features such as IP67 waterproof, high dynamic range (120dB HDR), auto white balance (AWB), and LED flicker mitigation (LFM), automotive GMSL2 cameras are ideal for autonomous vehicle applications. due to their advanced features, such as IP67 waterproof, high dynamic range (120dB HDR), auto white balance (AWB), and LED flicker mitigation (LFM).

Another FAKRA Z connectivity is for the 3D camera. The benefit of using a drone with a 3D camera is its ability to capture depth perception, enabling accurate 3D mapping and modeling. It is ideal for applications such as surveying, inspection, and navigation in complex environments.

2.2.7 DisplayPort

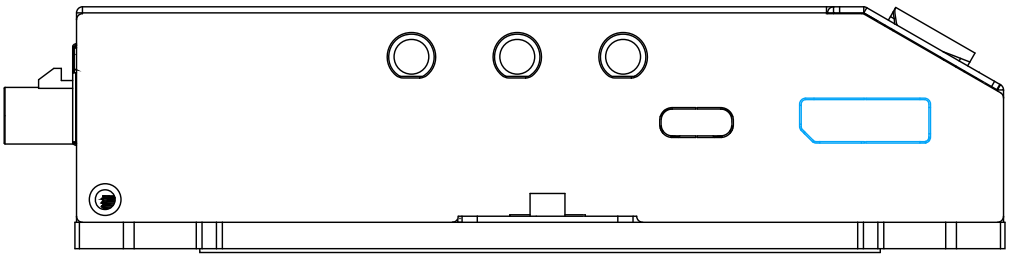

The system has a DisplayPort (DP) output which is a digital display interface that mainly connect video source and carry audio to a display device. It can deliver up to 3840 x 2160 in resolution and is designed to support **active** DP adapter/ cable. You can connect to display devices using DP-to-HDMI cable or DP-to-DVI cable.

DP-to-HDMI

DP-to-DVI

2.2.8 microSD Card Slot

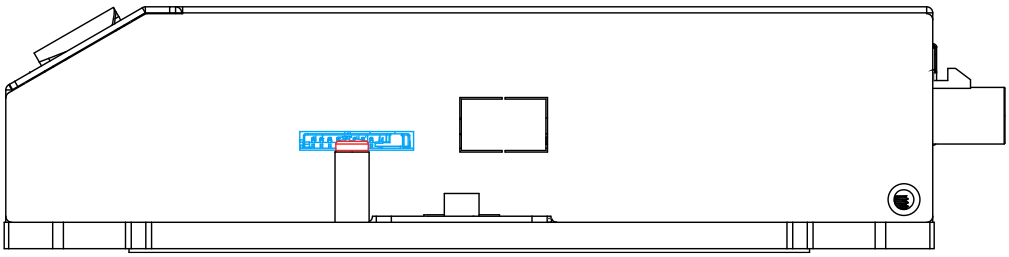

The microSD card slot (indicated in **blue**) is located on the side. To insert or remove the microSD card, you will have to remove the screw (indicated in **red**) to gain access.

2.3 Onboard I/O

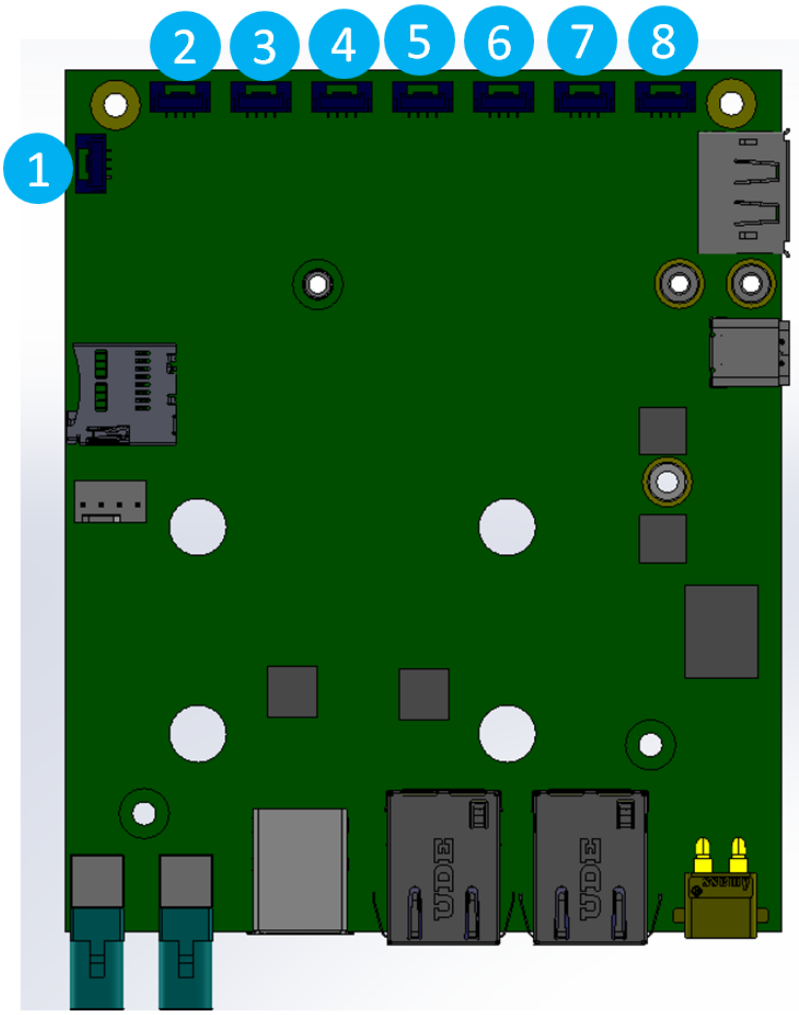

No.	Connection type
1.	1x USB2.0
2	I2C
3	1x CAN bus 2.0
4	1x UART
5	2x DI
6	2x DO
7	2x DO
8	Power Switch + Power LED

2.3.1 Onboard I/O Connectors 1 & 2 Pin Definition

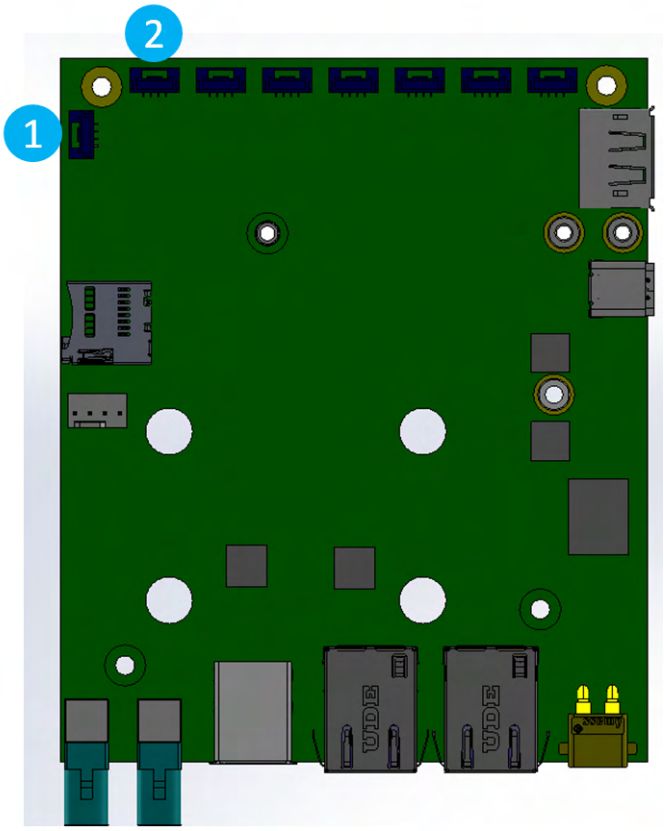

Ports 1 and 2 on the motherboard

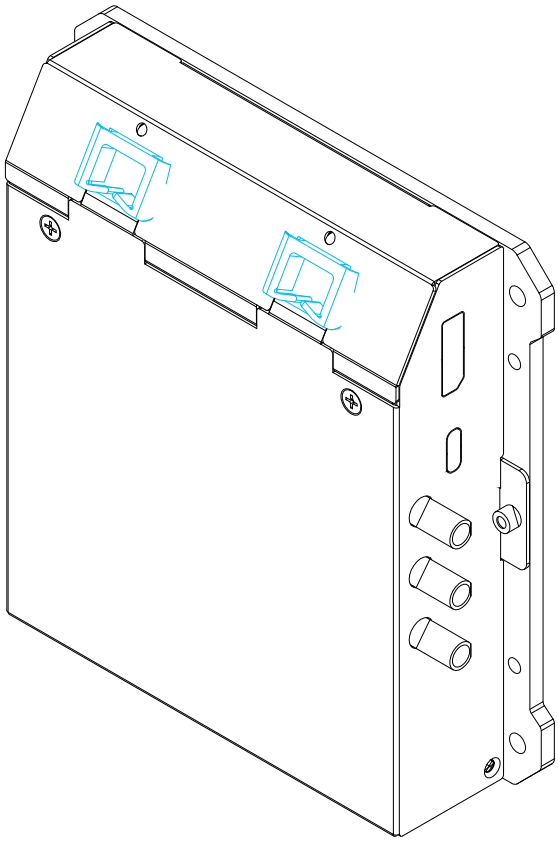

For FLYC-300-EC, cable connections can utilize existing openings on the enclosure

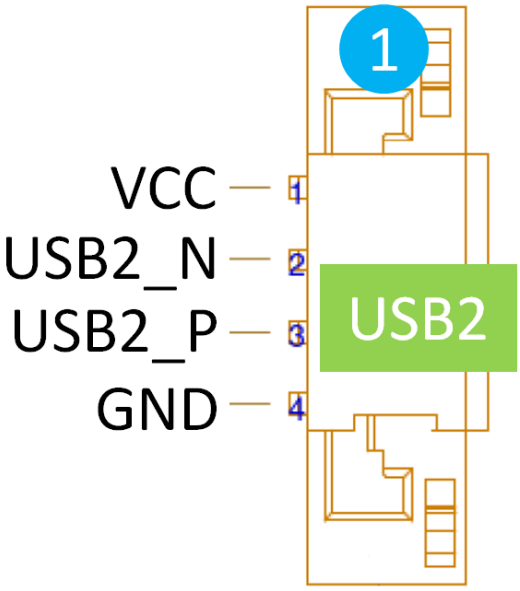

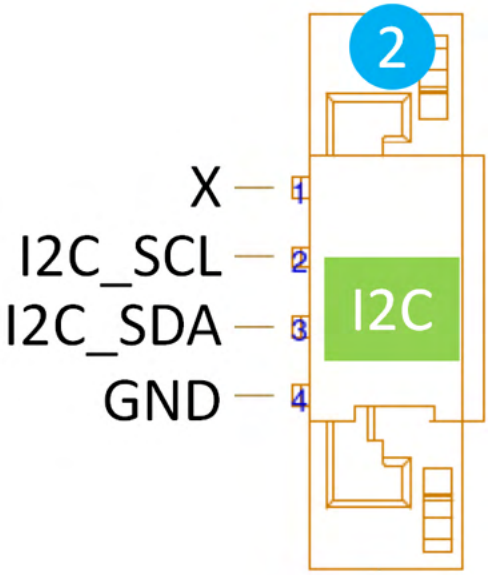

2.3.2 Onboard I/O Connectors 3 & 4 Pin Definition

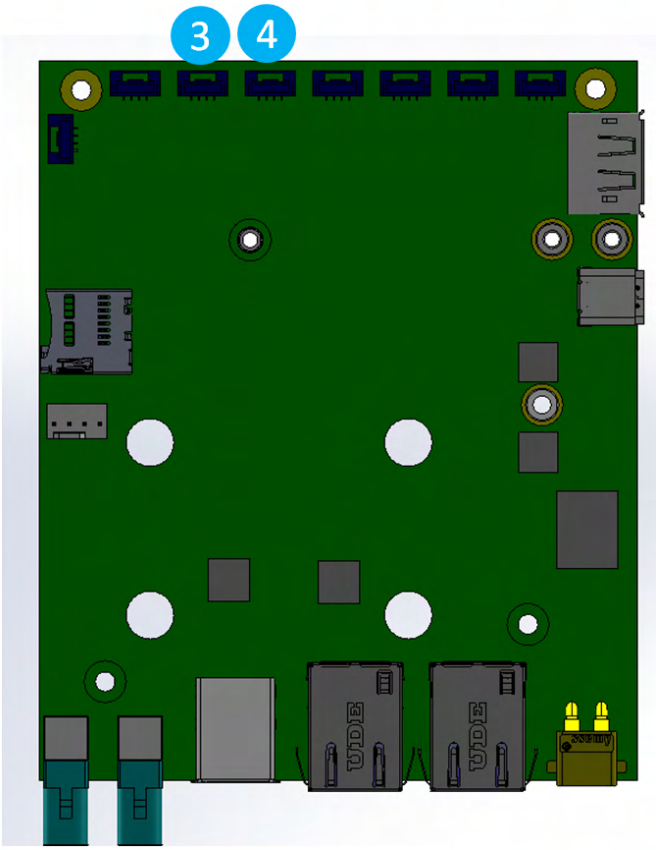

Ports 3 and 4 on the motherboard

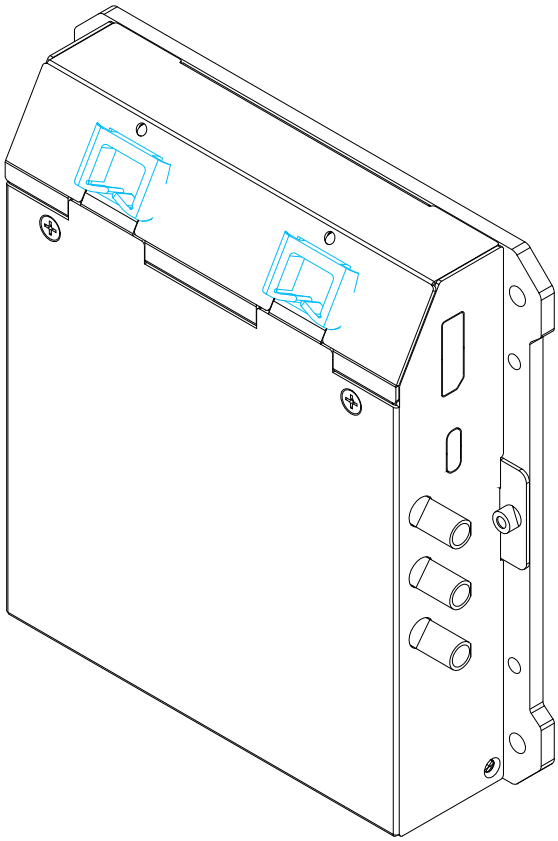

For FLYC-300-EC, cable connections can utilize existing openings on the enclosure

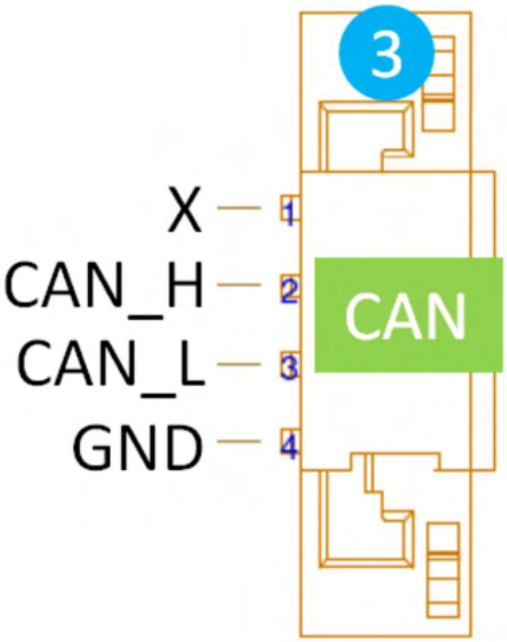

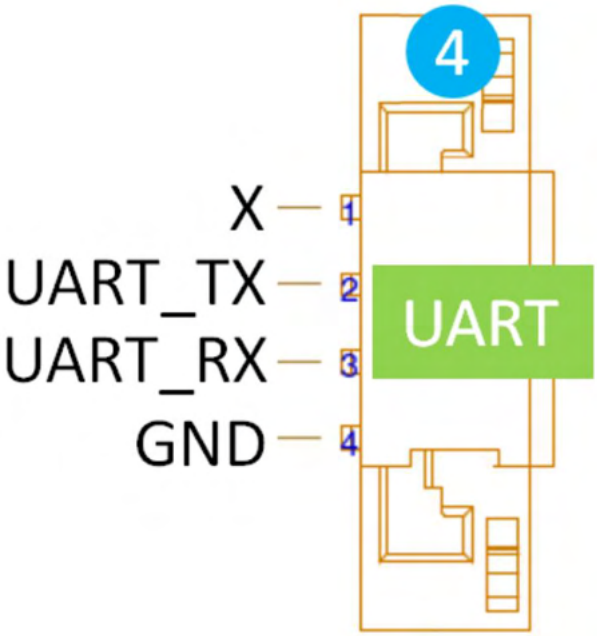

2.3.3 Onboard I/O Connectors 5 & 6 Pin Definition

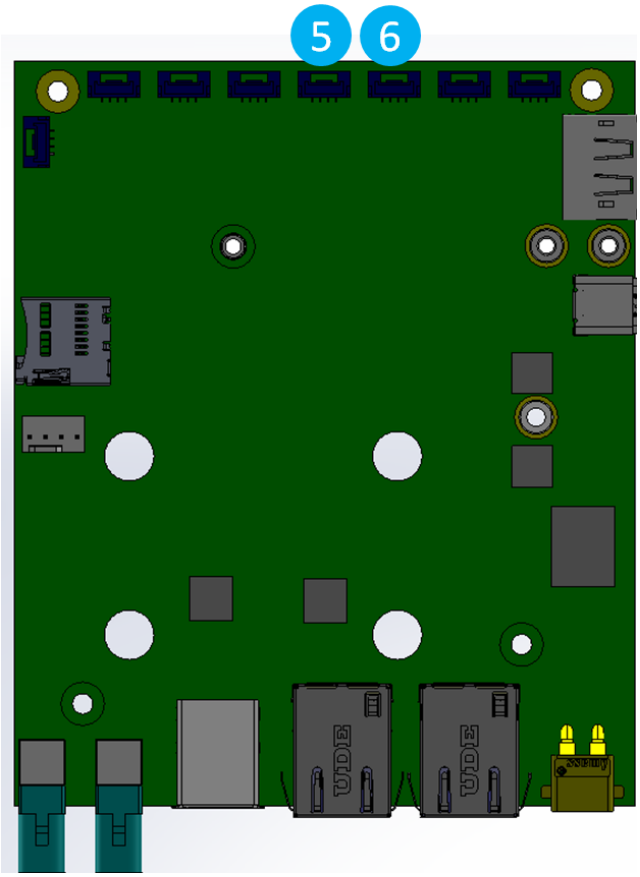

Ports 5 and 6 on the motherboard

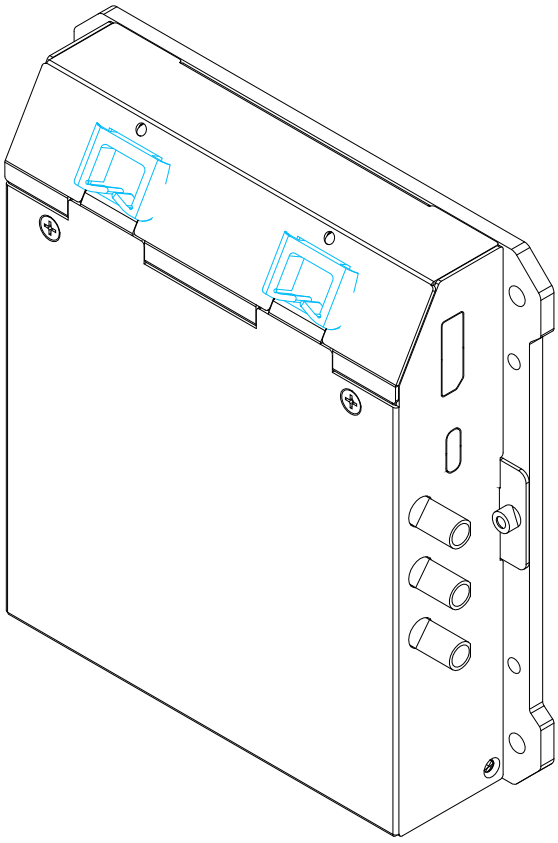

For FLYC-300-EC, cable connections can utilize existing openings on the enclosure

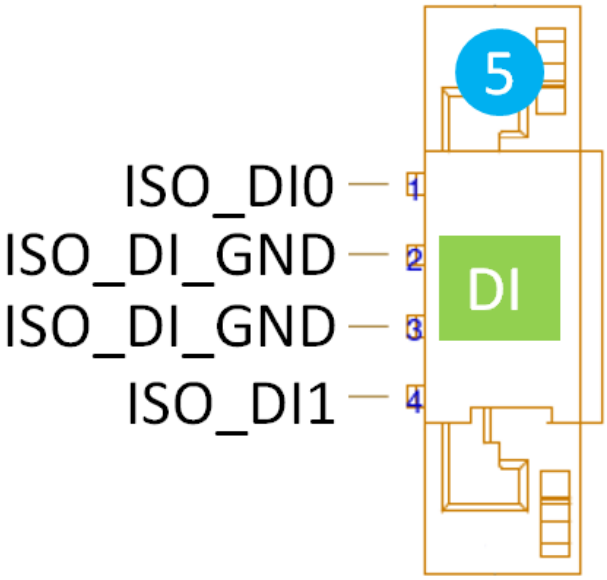

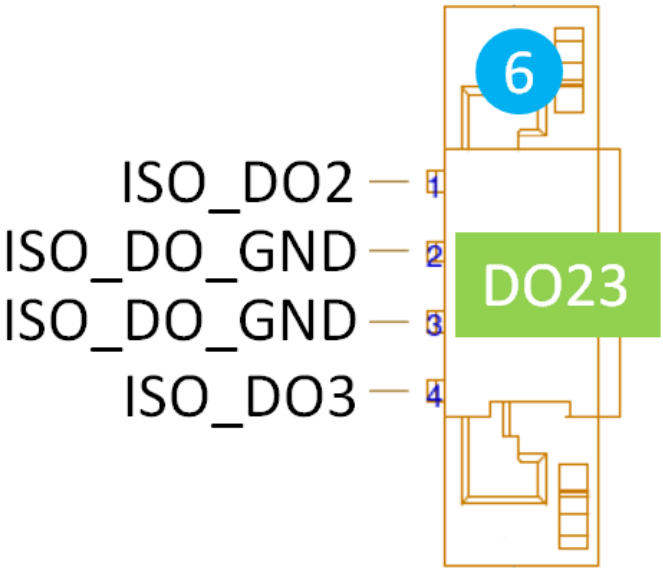

2.3.4 Onboard I/O Connectors 7 & 8 Pin Definition

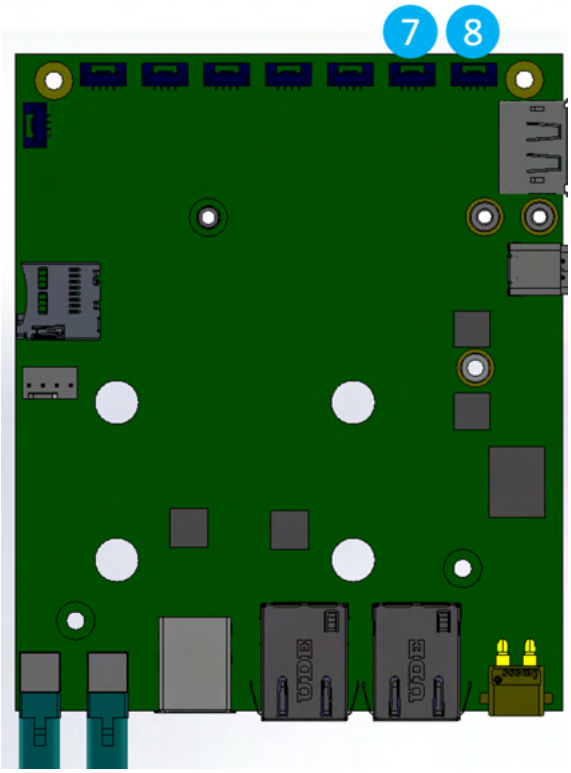

Ports 7 and 8 on the motherboard

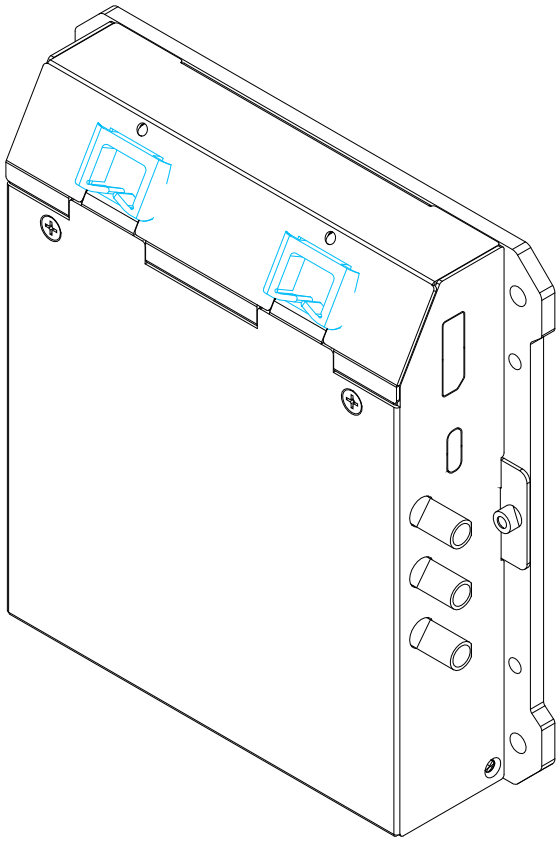

For FLYC-300-EC, cable connections can utilize existing openings on the enclosure

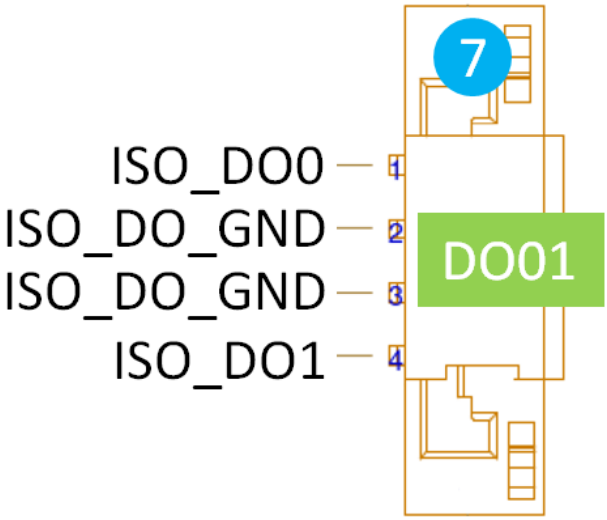

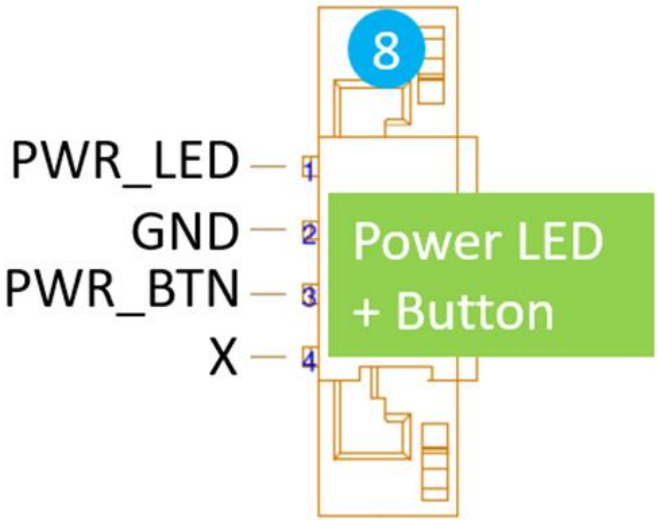

2.4 Onboard NVIDIA Jetson Orin NX Module

The system features a dedicated slot for NVIDIA Jetson Orin NX module .

NOTE

If your system came with an NVIDIA Jetson Orin NX preinstalled, the thermal pad protection film (for the SoM and NVMe SSD) at the bottom of the heatsink will be removed during the factory installation process.

2.5 Onboard M.2 2230 M Key Slot for NVMe SSD

The system has a Gen3 x1 PCIe M.2 2230 slot for you to install an NVMe SSD. The M.2 NVMe SSD offers significantly better system performances when compared to a 2.5” SSD.

NOTE

If your system came with an NVIDIA Jetson Orin NX preinstalled, the thermal pad protection film (for the SoM and NVMe SSD) at the bottom of the heatsink will be removed during the factory installation process.

M.2 (M Key) Slot Pin Definition

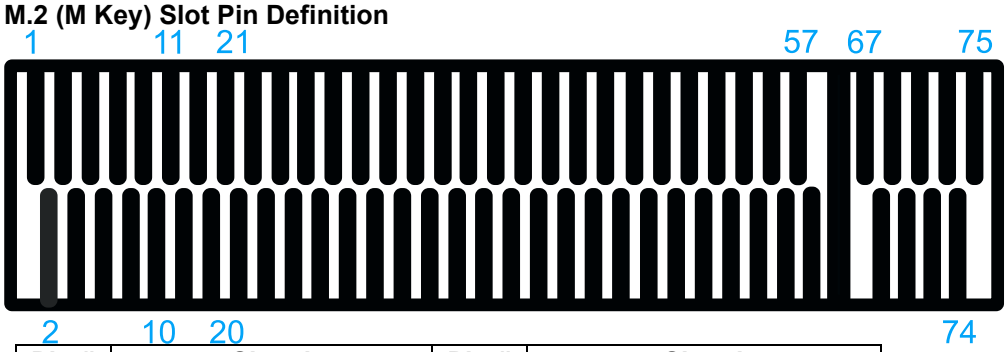

Pin #	Signal	Pin #	Signal
1	GND	**2**	+3V3
3	GND	**4**	+3V3
5	PERN3	**6**	-
7	PERP3	**8**	-
9	GND	**10**	DAS/DSS_N
11	PETN3	**12**	+3V3
13	PETP3	**14**	+3V3
15	GND	**16**	+3V3
17	PERN2	**18**	+3V3
19	PERP2	**20**	-
21	GND	**22**	-
23	PETN2	**24**	-
25	PETP2	**26**	-
27	GND	**28**	-
29	PERN1	**30**	-
31	PERP1	**32**	-
33	GND	**34**	-
35	PETN1	**36**	-
37	PETP1	**38**	-
39	GND	**40**	-
41	PERn0	**42**	-
43	PERp0	**44**	-
45	GND	**46**	-
47	PETn0	**48**	-
49	PETp0	**50**	PERST_N
51	GND	**52**	-
53	REFCLKN	**54**	-
55	REFCLKP	**56**	-
57	GND	**58**	-
Mechanical Key			
67	-	**68**	SUSCLK
69	PEDET	**70**	+3V3
71	GND	**72**	+3V3
73	GND	**74**	+3V3
75	GND		

2.6 Onboard M.2 3042/3052 B Key Slot with SIM

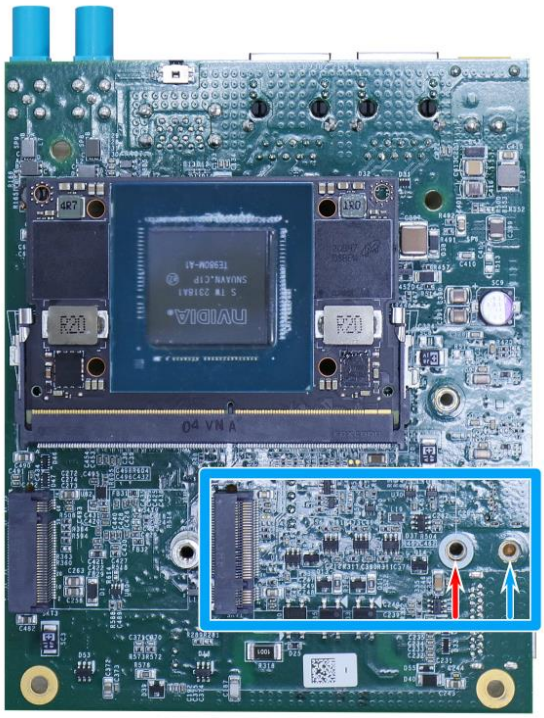

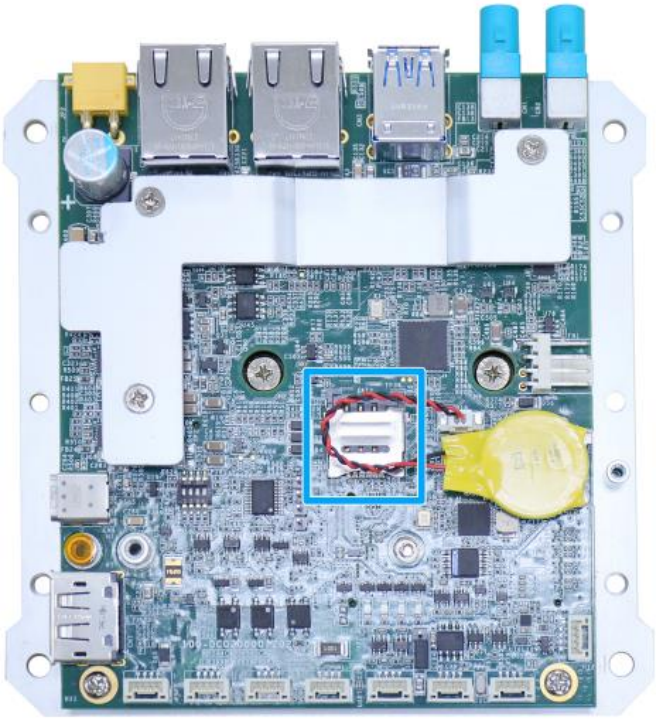

The system has an M.2 3042/ 3052 slot (indicated in blue rectangle) with a SIM slots (indicated in **red rectangle**) supporting 5G/ 4G. A copper standoff is provided for you to secure onto the motherboard into the **red arrow** location for an M.2 2242/ 3042 module, or into the **blue arrow** location for an M.2 3052 module. By installing a 5G or 4G M.2 module and SIM card, you can access the internet via the provider's network.

For wireless 5G/ 4G, SMA antenna apertures are located on side panels:

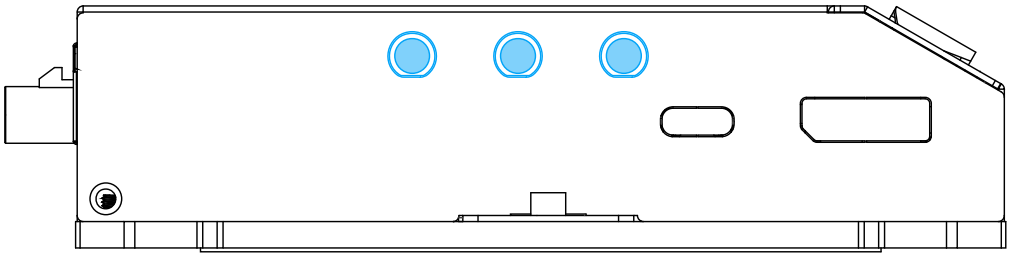

M.2 (B Key) Slot Pin Definition

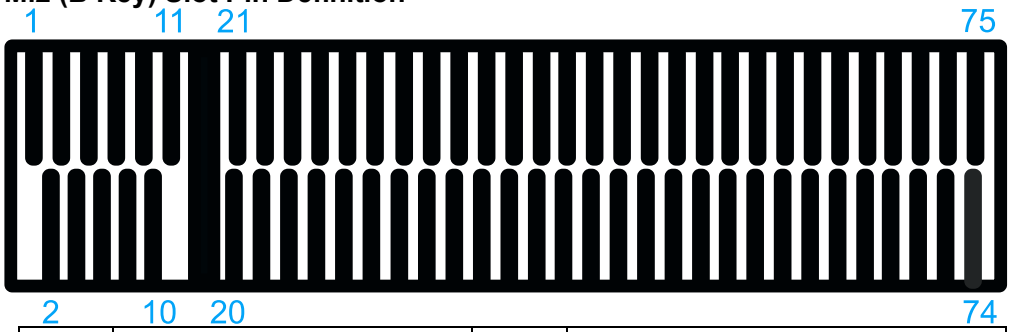

Pin #	Signal	Pin #	Signal
1	-	**2**	+3V3
3	GND	**4**	+3V3
5	GND	**6**	FULL_CARD_POWER_OFF_N
7	USB_D+	**8**	-
9	USB_D-	**10**	-
11	GND		
Mechanical Key			
21	-	**20**	-
23	-	**22**	-
25	-	**24**	-
27	GND	**26**	-
29	USB3.0-RX-	**28**	-
31	USB3.0-RX+	**30**	UIM1-RESET
33	GND	**32**	UIM1-CLK
35	USB3.0-TX-	**34**	UIM1-DATA
37	USB3.0-TX+	**36**	UIM1-PWR
39	GND	**38**	-
41	PCIE2_RX0_-	**40**	-
43	PCIE2_RX0_+	**42**	-
45	GND	**44**	-
47	PCIE2_TX0_-	**46**	-
49	PCIE2_TX0_+	**48**	-
51	GND	**50**	PCIE2_RST_-
53	PCIE2_CLK_-	**52**	PCIE2_CLKREQ_-
55	PCIE2_CLK_+	**54**	+3V3
57	GND	**56**	-
59	-	**58**	-
61	-	**60**	-
63	-	**62**	-
65	-	**64**	-
67	-	**66**	-
69	-	**68**	-
71	GND	**70**	+3V3
73	GND	**72**	+3V3
75	-	**74**	+3V3

2.7 CAN Termination

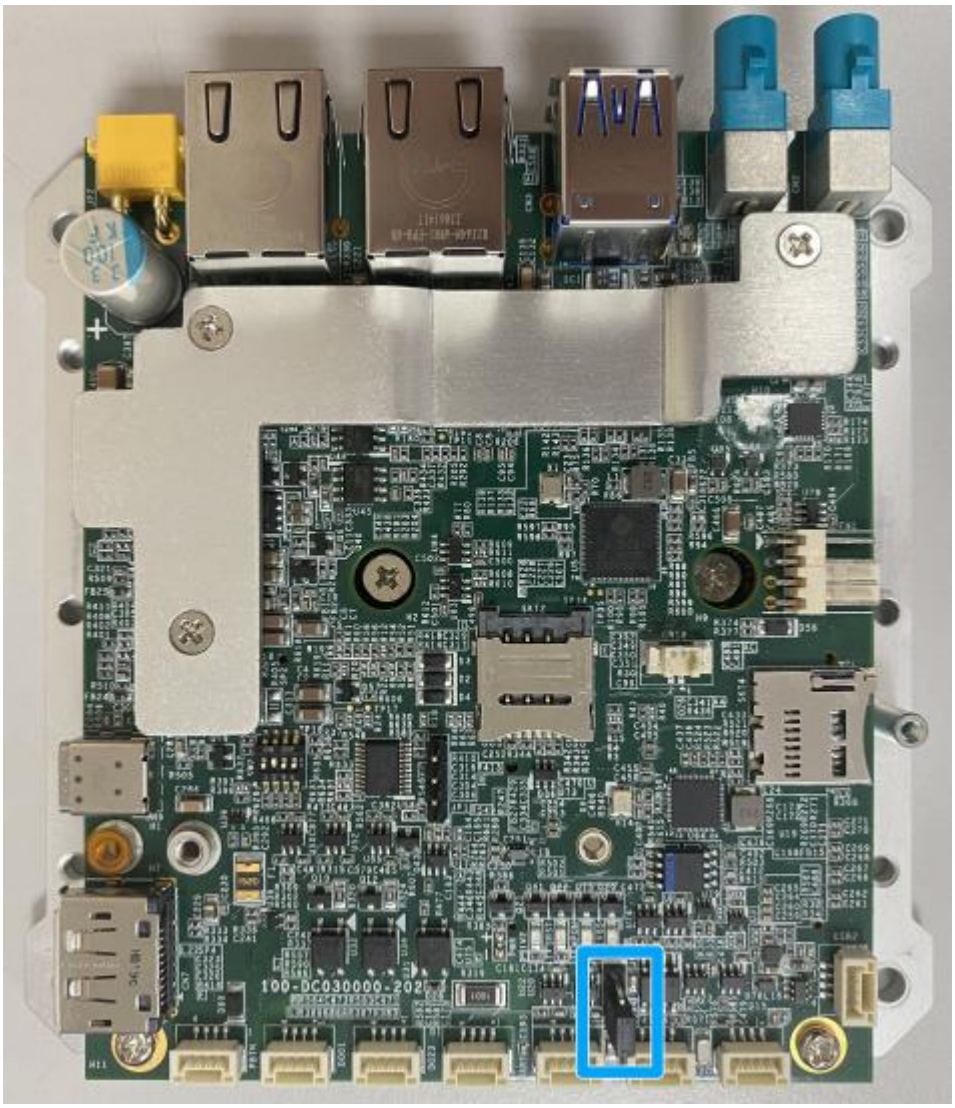

CAN Termination ON

CAN Termination OFF (Default)

2.8 DIP Switch

Switch / Mode	1	2	3	4
Auto power on (default)	OFF	OFF	OFF	OFF
Power button	ON	OFF	OFF	OFF
Auto power on + recovery mode (for reflashing Orin NX)	OFF	ON	OFF	OFF
Power button + recovery mode (for reflashing Orin NX)	ON	ON	OFF	OFF

3 Installation

3.1 Disassembling the System

1. Please the system on a sturdy flat surface and remove the screws indicated.

2. Turn it upside down, and remove the screws indicated at the bottom of the enclosure.

3. Turn the system right side up, and remove the front panel.

4. Remove the top panel.

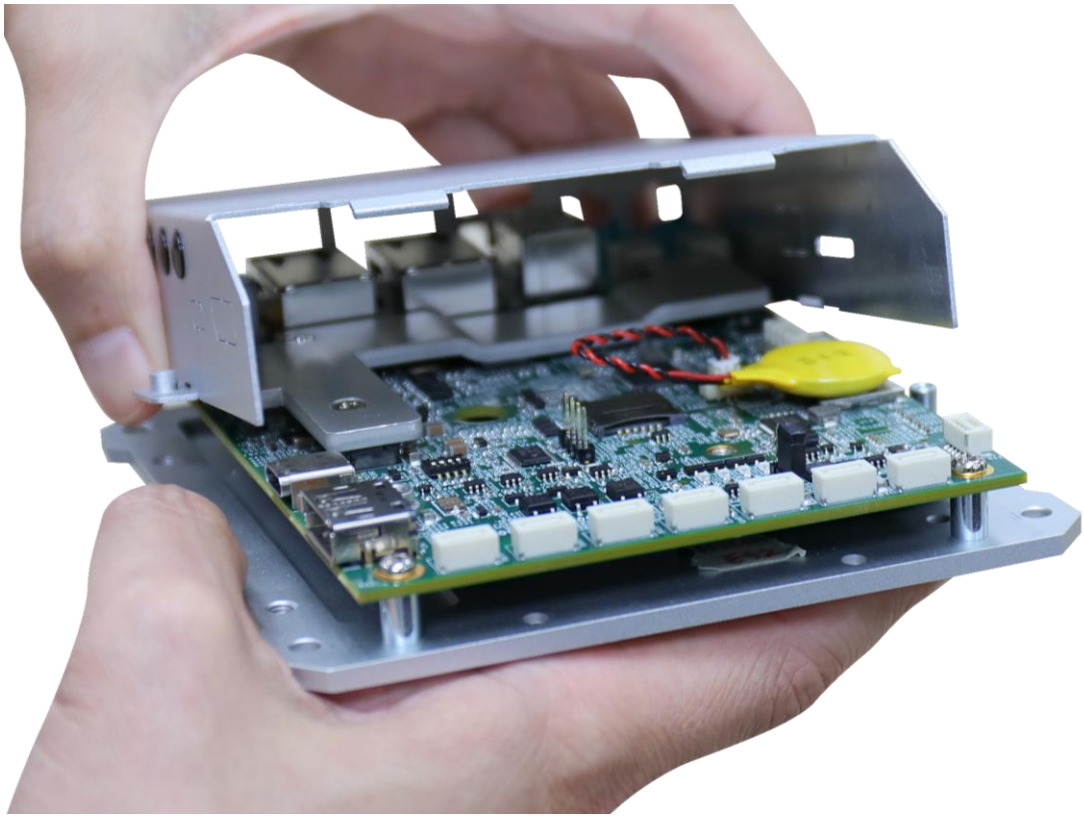

5. Remove the indicated screws securing the heat spreader.

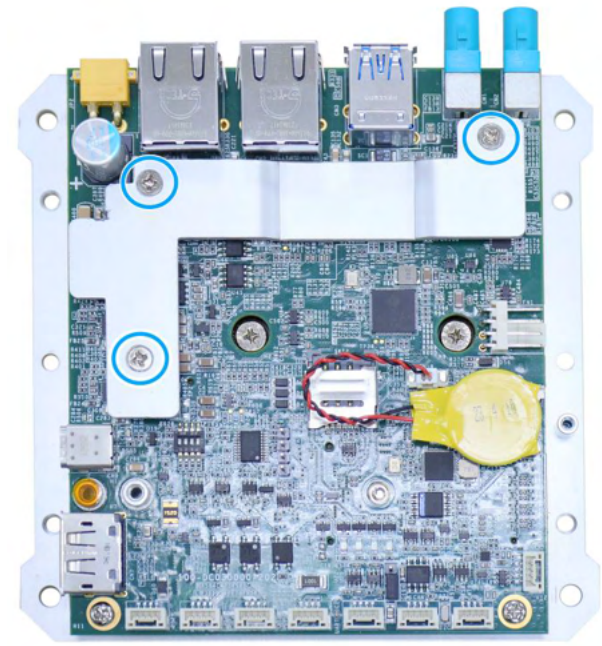

Remove screws indicated

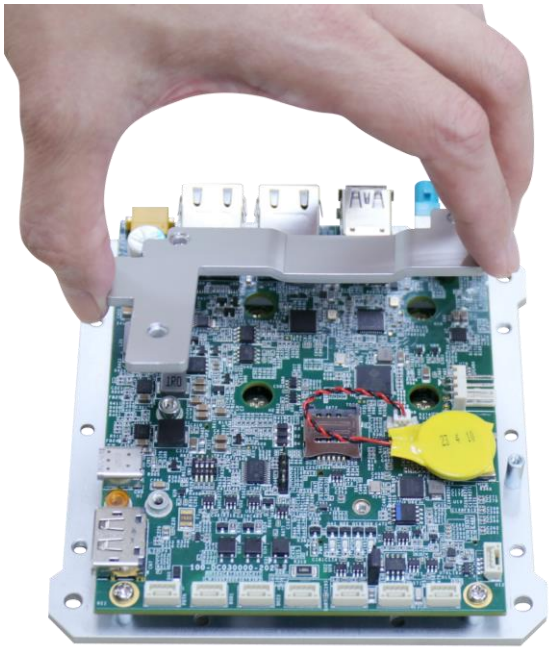

Remove heat spreader

6. Remove the two copper stands indicated.

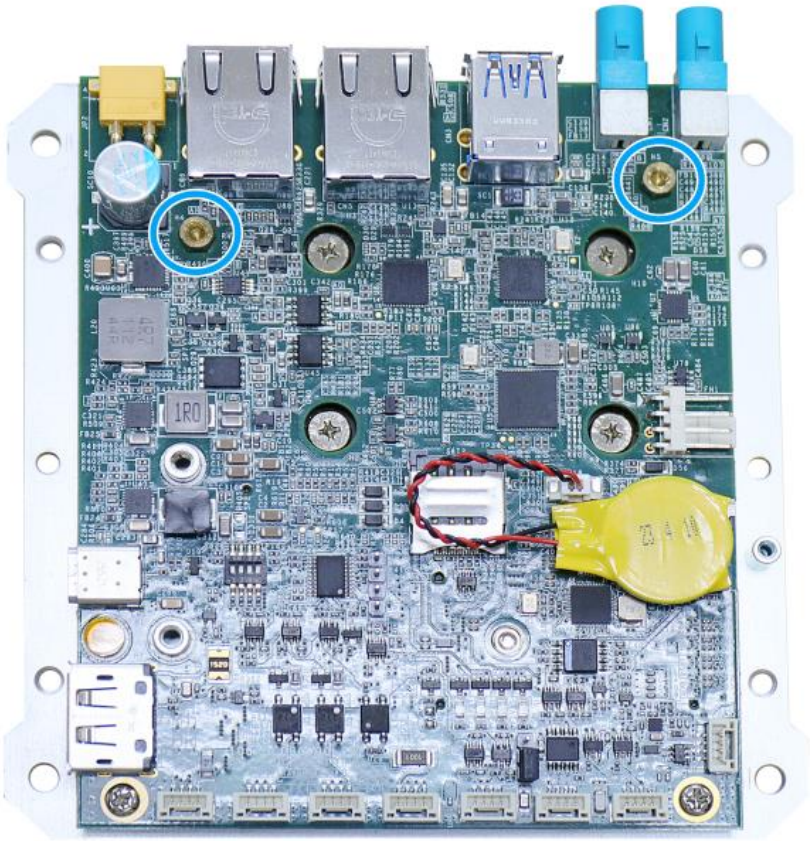

7. Remove the screws indicated securing the motherboard onto the enclosure, and separate the motherboard from the enclosure.

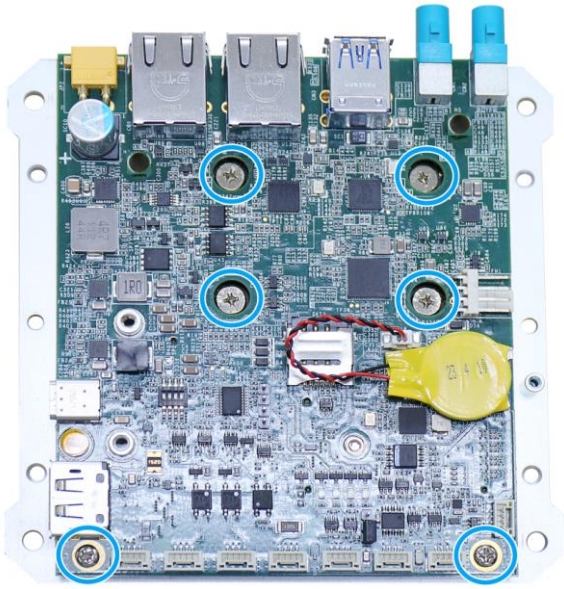

Remove the screws indicated

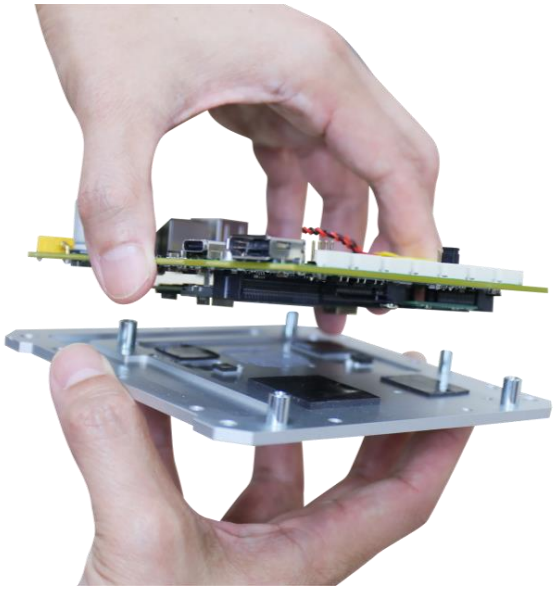

Separate the motherboard from enclosure

8. The NVIDIA Jetson module, M.2 expansion slots can be located on the other side of the motherboard.

3.2 NVIDIA Jetson SoM

To NVIDIA Jetson Orin NX system on module (SoM) should already be installed in your system. Should you need to uninstall/ install the SoM, please refer to the following instructions:

1. Please refer to Disassembling the System to gain access to internal components.
2. To uninstall the existing NVIDIA Jetson SoM, push the two retaining clips (indicated by **blue circles**) outward, and the SoM will lift away from the PCB.

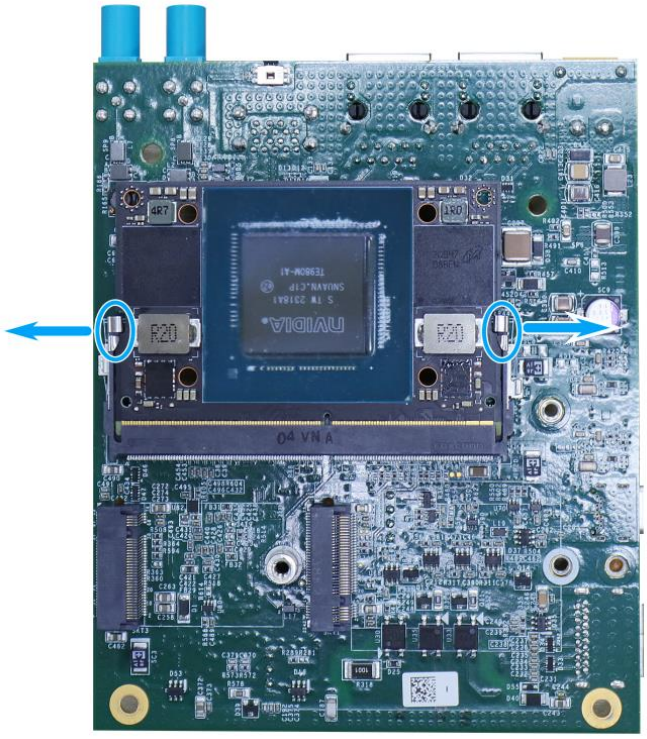

3. Remove the insert the replace NVIDIA Jetson SoM on a 45 degree angle.

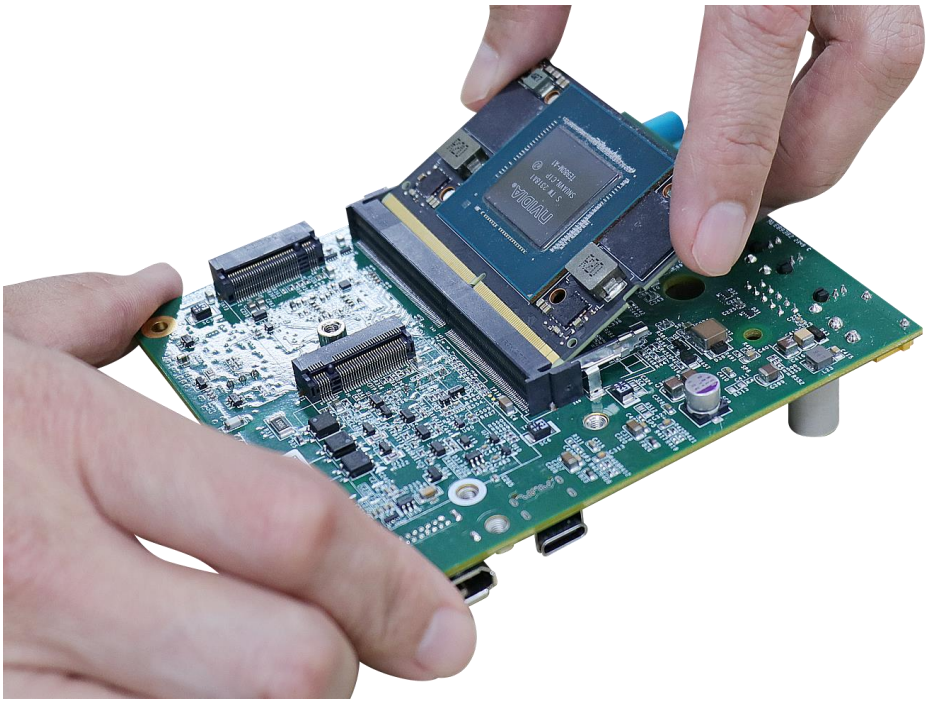

4. Press the SoM down towards the motherboard until you hear a click (retaining clips clipped-in).

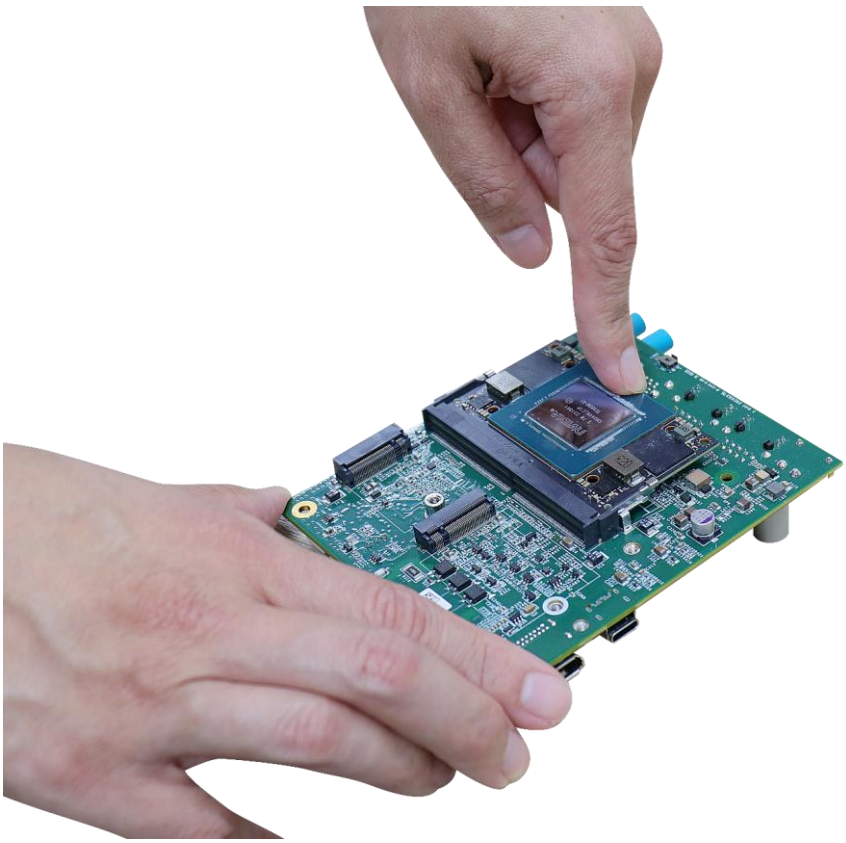

5. Reinstall the enclosure when done. For other installation procedures, please refer to respective sections.

3.3 M.2 2230 M Key NVMe SSD Installation

To install the M.2 2230 M key NVMe SSD, please refer to the following instructions:

1. Please refer to Disassembling the System to gain access to internal components.
2. Insert the module on a 45 degree angle in to the slot.

3. Press the SSD down and secure it with a screw.

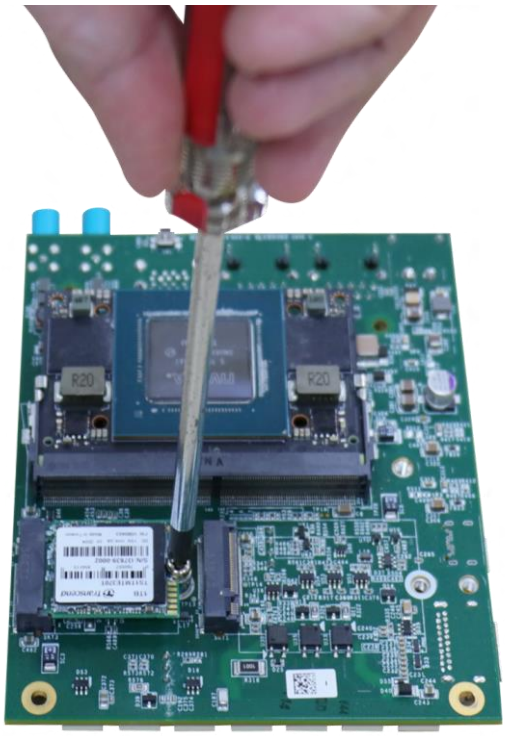

4. Remove the corresponding thermal pad protective film on the enclosure.

5. Reinstall the enclosure when done. For other installation procedures, please refer to respective sections.

3.4 M.2 3042/3052 B key Module With SIM Slot Installation

> NOTE
>
> *If you are installing the certified module, SparkLAN WNFQ-262ACNI(BT), you will need to remove the thermal pad attached on the enclosure due to the thickness of the module.*

To install the M.2 2230 B key module, please refer to the following instructions:

1. Please refer to Disassembling the System to gain access to internal components.
2. Insert the module on a 45 degree angle in to the slot and secure with a screw.

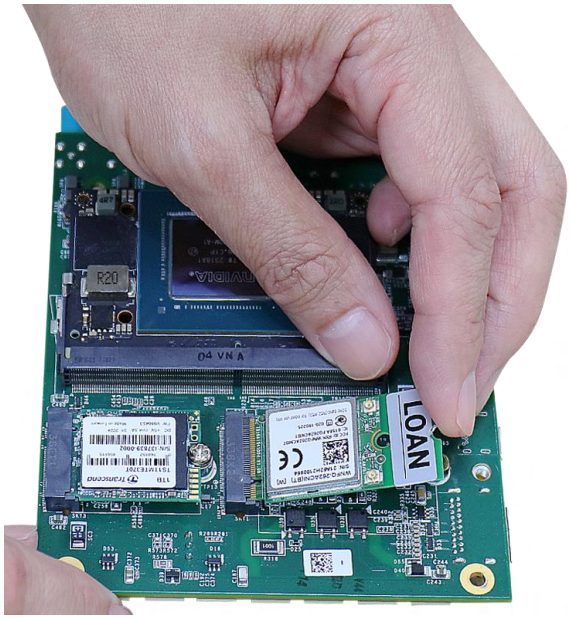

3. Secure the module with a screw.

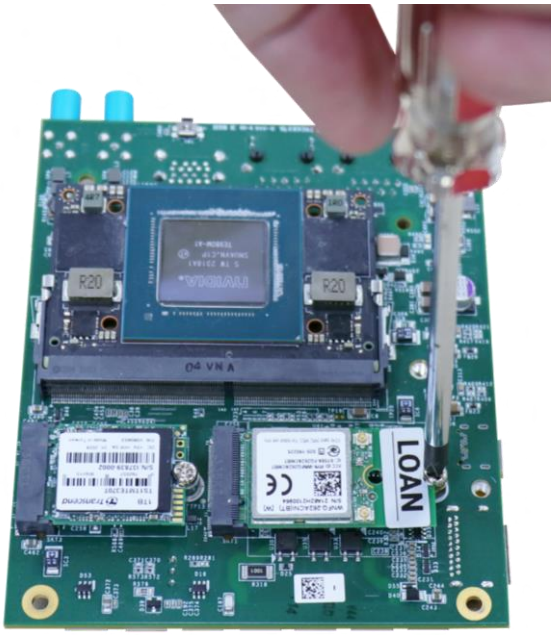

4. The SIM card slot is located on the other side of the motherboard. The SIM slot indicated in **green** can be inserted from the panel.

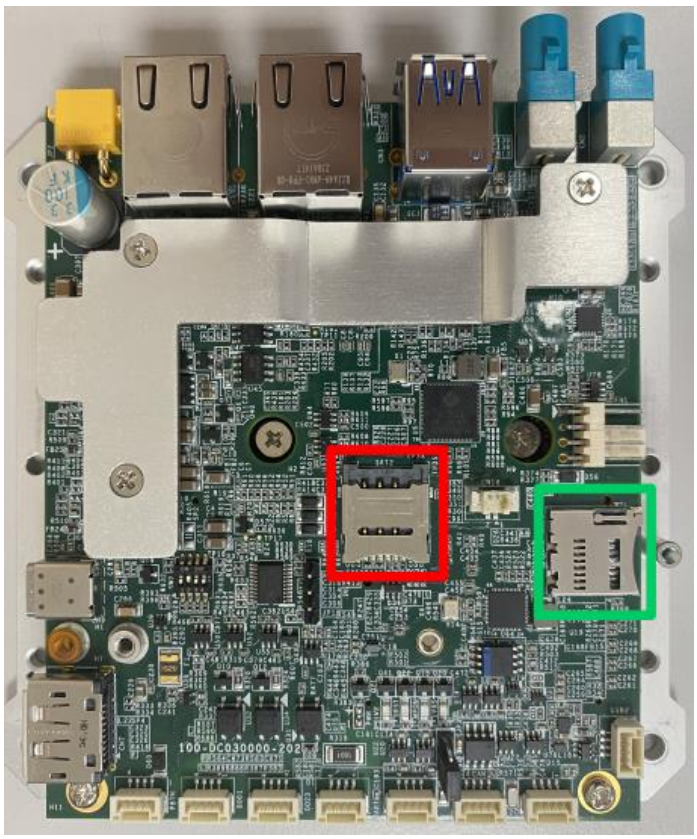

5. If you are installing a 5G/ 4G wireless module that requires a SIM card, please install the SIM card first. Otherwise go to the next step. Push the SIM slot holder in the direction shown and flip open the holder to place the SIM into the slot.

Push the SIM holder in the direction shown

Flip open the holder and place SIM

6. Remove the corresponding thermal pad protective film (or thermal pad if you are installing the SparkLAN WNFQ-262ACNI(BT) module) on the enclosure.

7. Reinstall the enclosure when done. For other installation procedures, please refer to respective sections.

3.5 Reinstalling the Enclosure

To reinstall the enclosure, please refer to the following procedure.

1. Attach the motherboard onto the enclosure, and secure the screws indicated. Note the screws indicated in **red** should be spring mounted to secure the Jetson SoM.

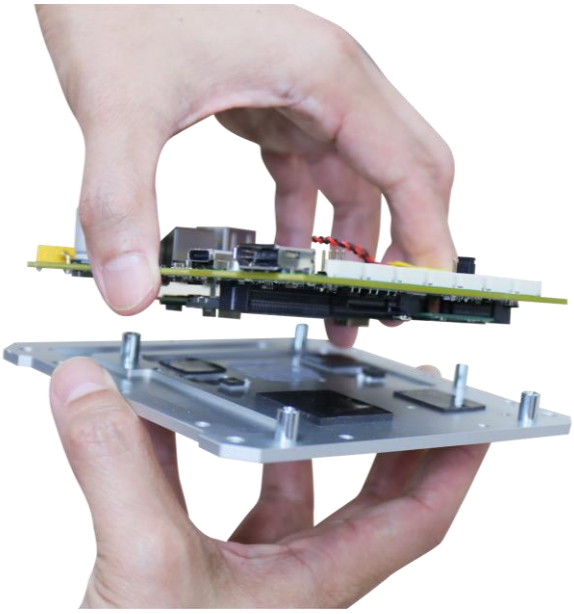

Attach motherboard to enclosure

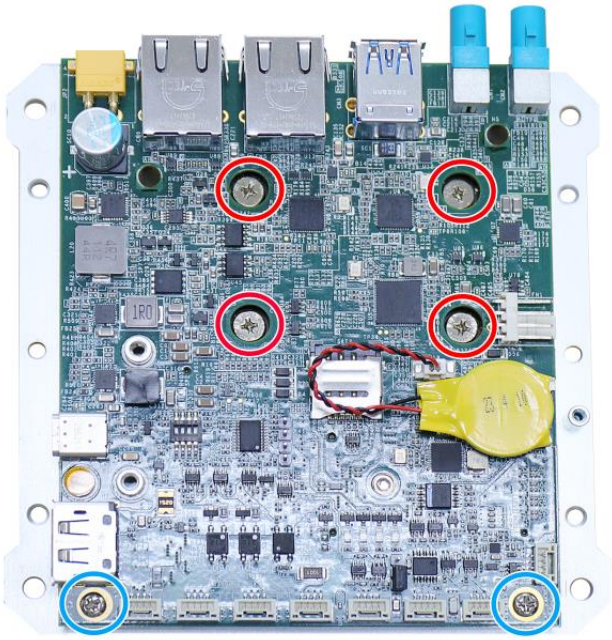

Secure indicated screws

2. Install the copper stands.

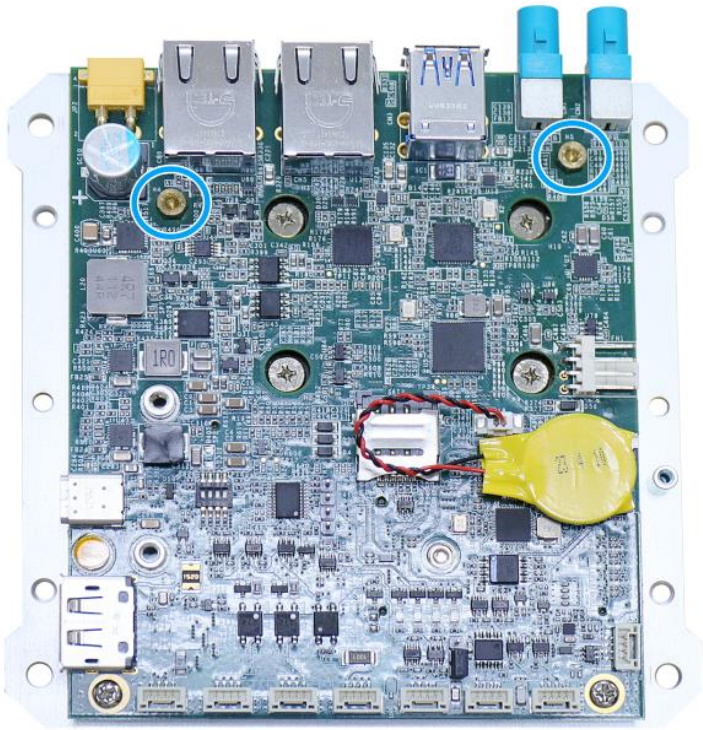

3. Place the heat spreader on the copper stand, and secure with screws indicated.

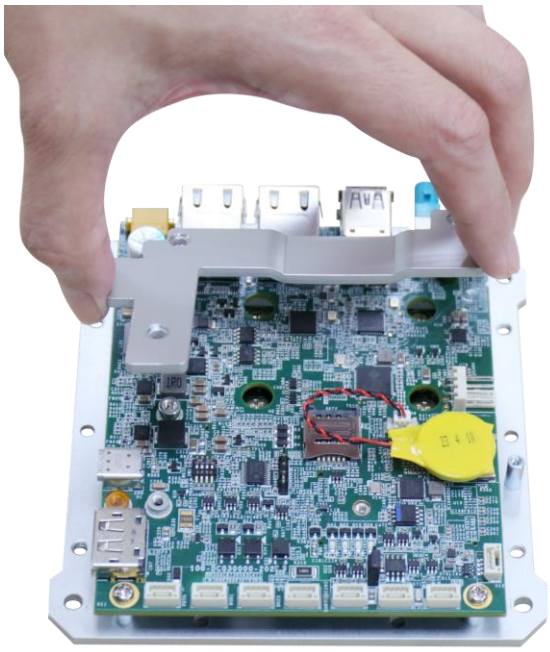

Place heat spreader on copper stand

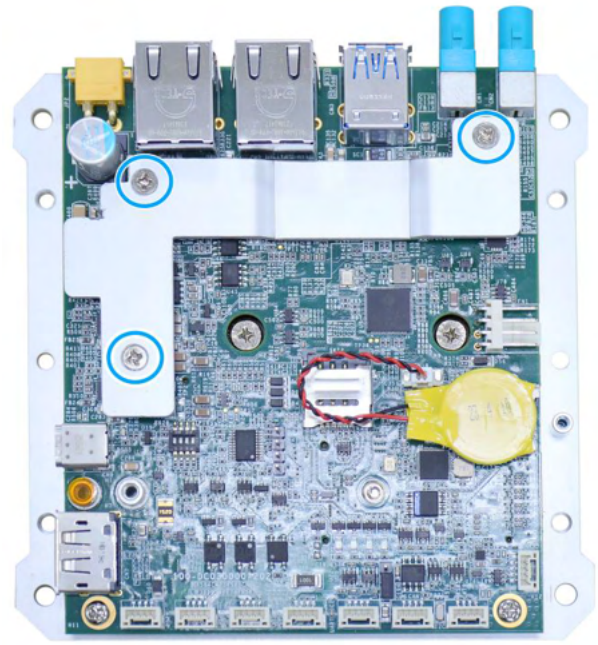

Secure with screws indicated

4. Place the top enclosure cover back on.

5. Place the front panel back on.

6. Holding the enclosure panels in-place, turn the system upside down and secure all the screws indicated to complete the enclosure installation.

3.6 Fan Kit Installation (Optional)

The system comes with an optional fan kit, and to install it, please refer to the following procedures:

1. Remove the punch-out panel for the fan's 3-pin cable.

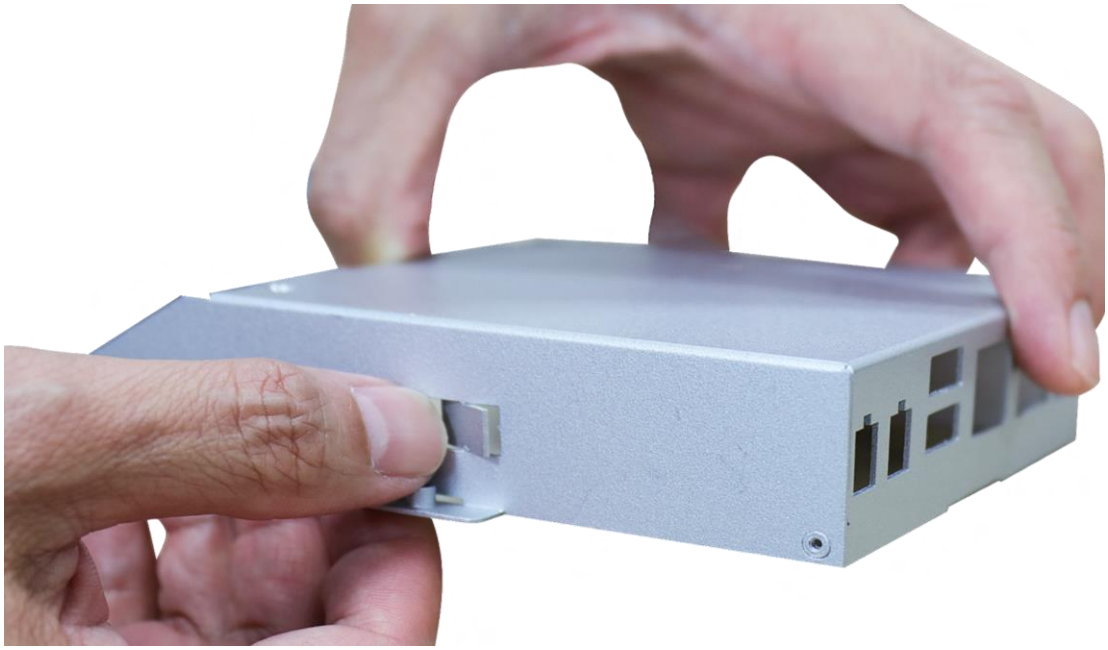

2. Position the fan at the bottom of the enclosure while making sure the base mount of the fan matches the screw threads. You may need to manually rotate the fins to secure the screws.

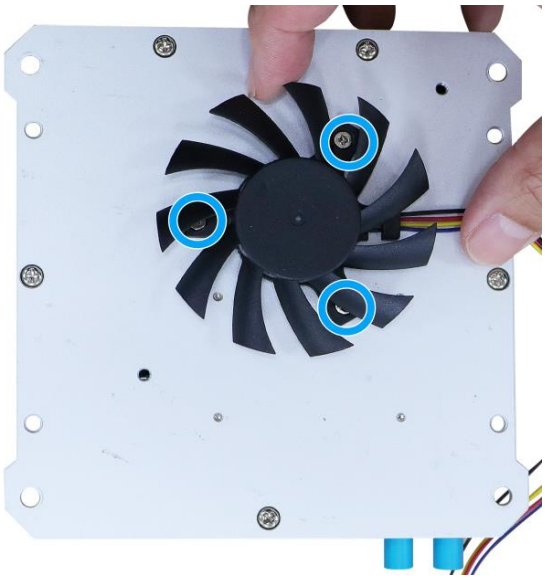

Secure fan base

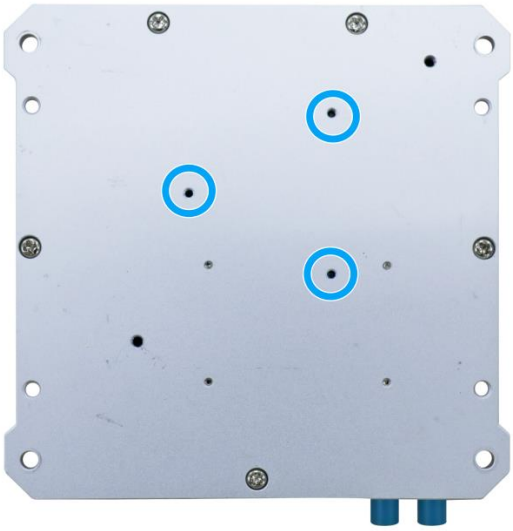

Screw thread positions

3. Plug in the fan's 3-pin cable into the removed punch-out panel.

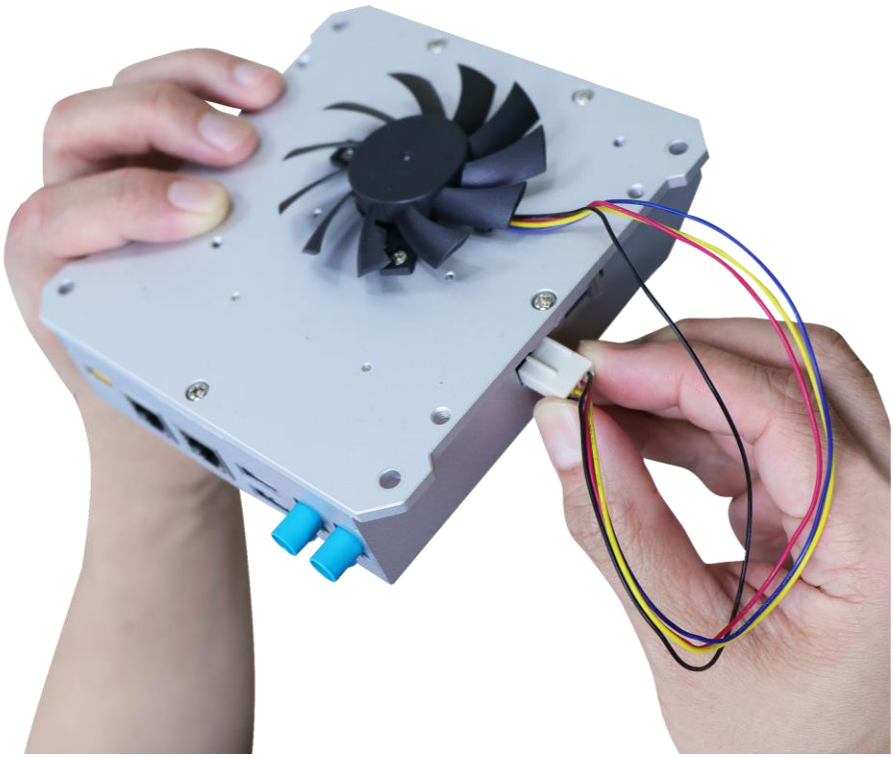

4. Secure the fan enclosure with indicated screws, and adjust the cable-slack as necessary to complete the fan kit installation.

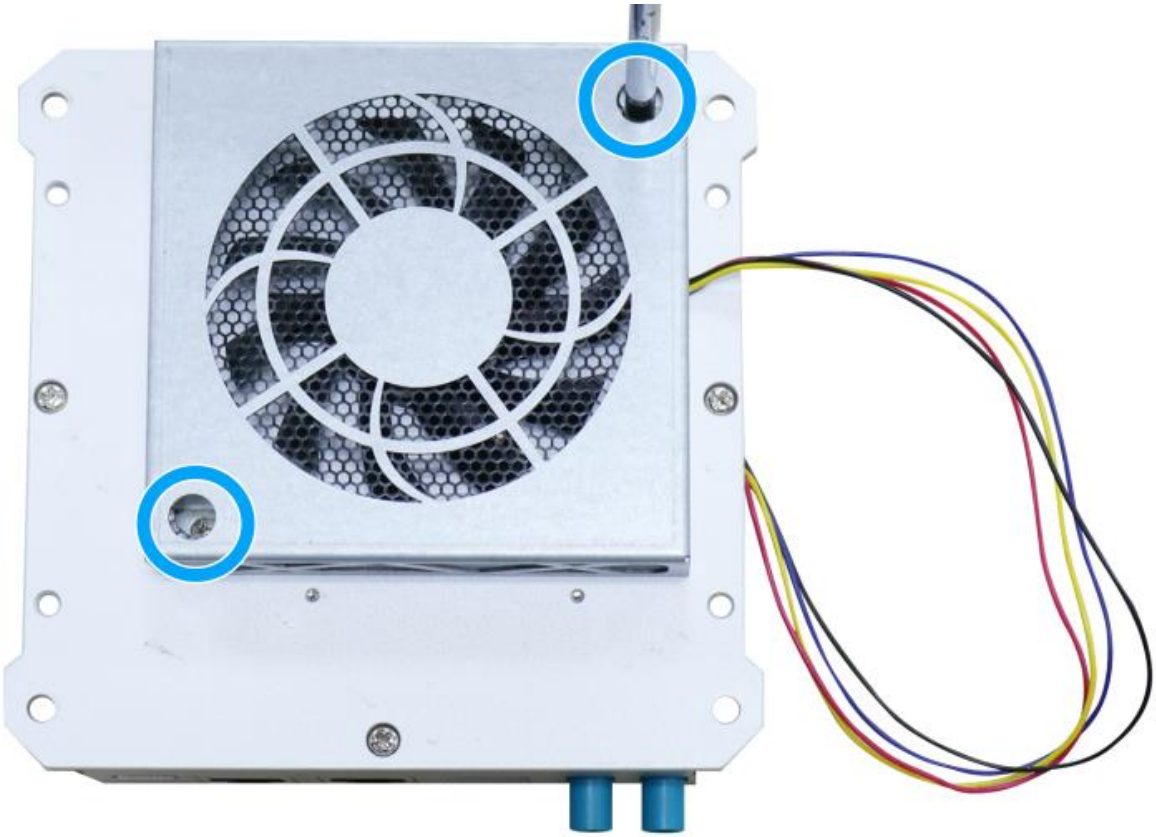

3.7 Mounting the System

3.7.1 Mounting Inside an Enclosure

> NOTE
>
> *Please contact your sales representative if you wish to purchase a thermal pad.*

The system can be installed by utilizing the four M4 threads on the flattop heatsink onto the panel of an enclosure, inside.

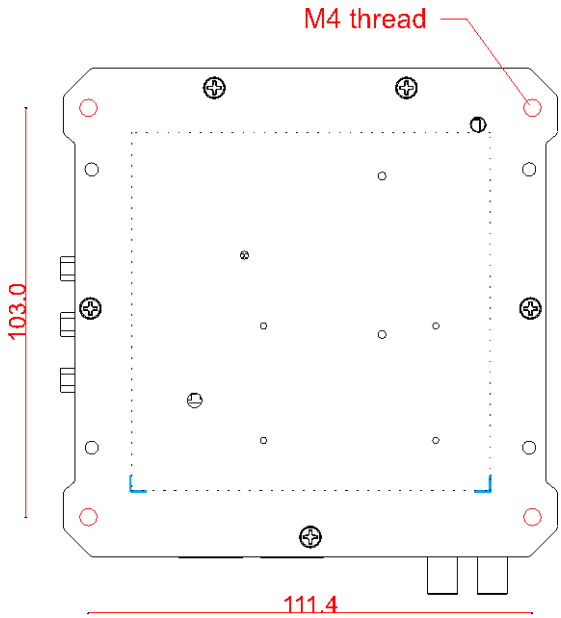

Screw hole locations/ measurements, and thermal pad position (dotted lines)

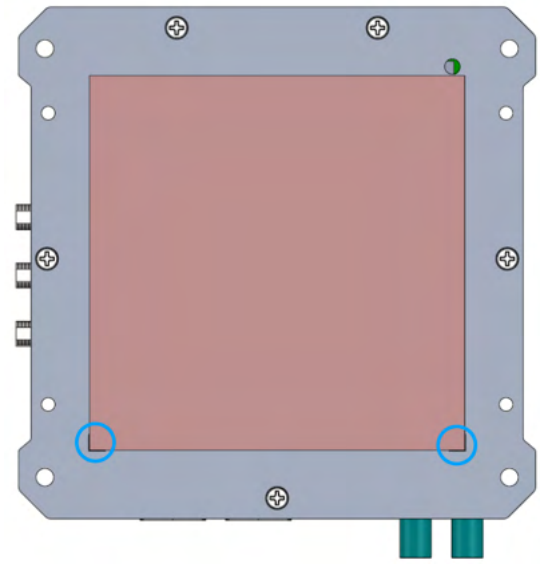

For the optional thermal pad (90x90x0.5mm), attach it by aligning it with the indicated corners in blue

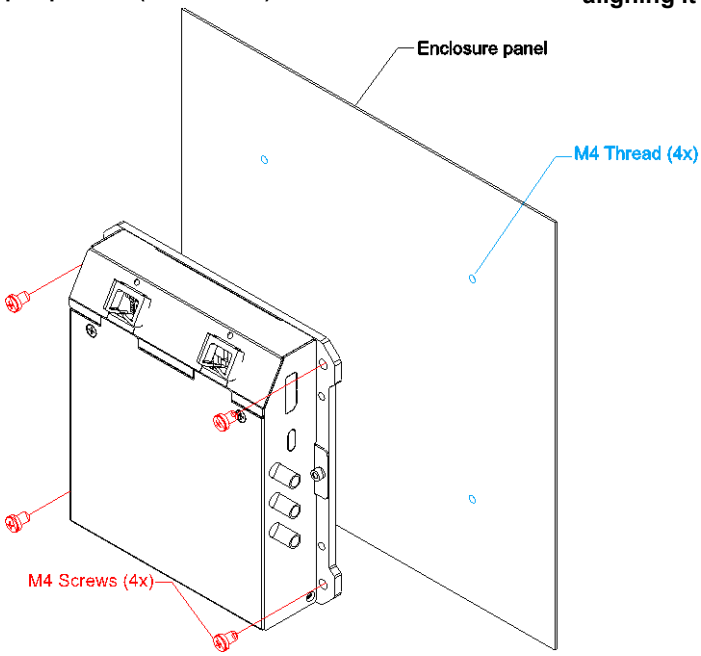

Securing the system onto an panel, inside

3.7.2 Mounting Outside of an Enclosure

> NOTE
>
> *Please contact your sales representative if you wish to purchase a thermal pad.*

To mount the system onto an enclosure's panel, match the four M4 threads and secure the system onto the panel of the enclosure, outside.

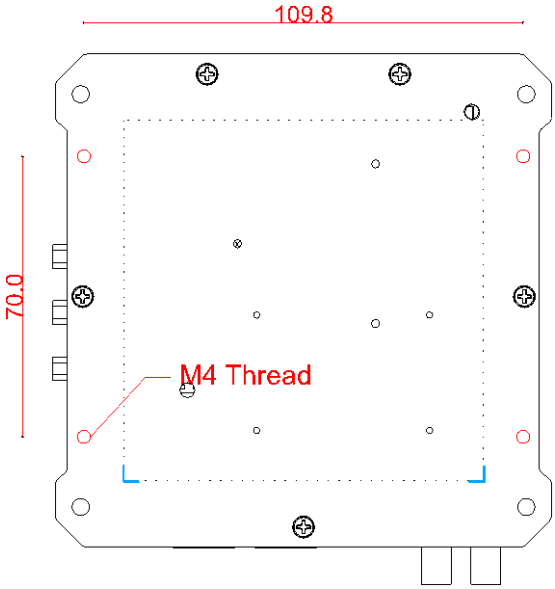

Screw hole locations/ measurements, and thermal pad position (dotted lines)

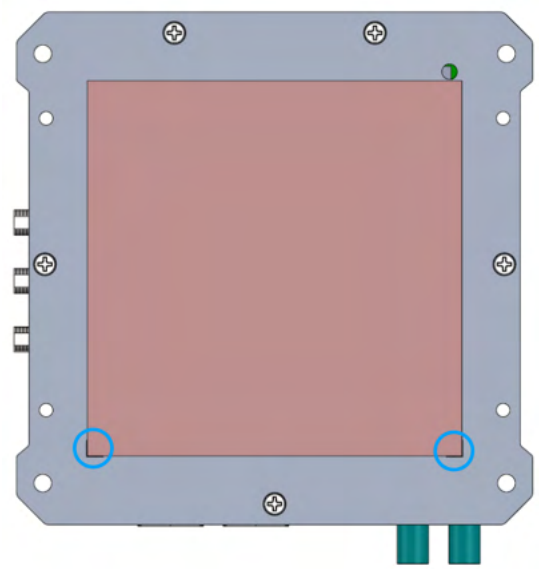

For the optional thermal pad (90x90x0.5mm), attach it by aligning it with the indicated corners in blue

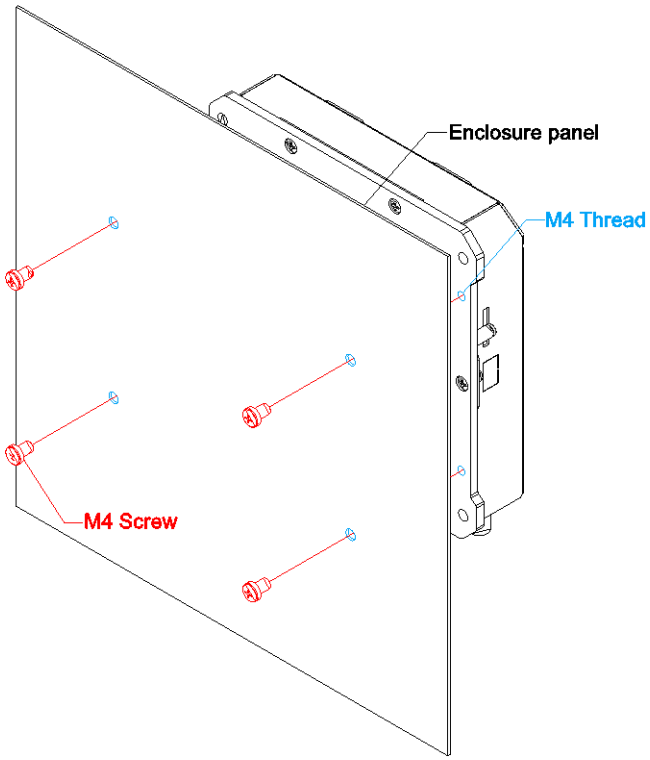

Securing the system onto an panel, inside

4 Reflashing the System

The system is shipped with JetPack 5.x installed as a turnkey solution. If you are familiar and experienced with the platform, you can skip this section and start your development.

This section will show you how to reflash the system with a pre-built system image by Neousys. Just like Jetson Orin NX Developer Kit, it can't install its system by itself. In other words, you will need another computer, **Host Machine**, to reflash the system via a microUSB to USB type A cable.

For detailed reflash process procedure, please refer to this link.