Neousys Technology Inc.

NRU-170-PPC Series

User Manual

Revision 1.1

Table of Contents

Table of Contents **2**
Legal Information **4**
Contact Information **5**
Notices **6**
Safety Precautions **7**
Service and Maintenance **8**
ESD Precautions **8**
About This Manual **9**

1 Introduction

1.1 NRU-171V-PPC Specification **11**
1.2 NRU-172S-PPC Specification **13**
1.3 Dimensions **15**
1.3.1 Front View 15
1.3.2 Top view 15
1.3.3 Side view 16
1.3.4 Bottom view 16

2 Setting Up Your NRU-170-PPC

2.1 Unpacking Your System **17**
2.2 Front I/O Panel **18**
2.2.1 M12 A-coded DC-in Port with Ignition Power Control 19
2.2.2 FAKRA Z Connector for GMSL2 Camera (NRU-171V-PPC Only) 20
2.2.3 Power Over Ethernet + (NRU-172S-PPC Only) 21
2.2.4 M12 X-coded Gigabit Ethernet 22
2.2.5 M12 A-coded CAN FD, COM & DI (GPS PPS) 23
2.3 Rear I/O Panel **24**
2.3.1 M12 A-coded USB 2.0 Port 25
2.3.2 Power Button 26
2.4 Internal I/Os **27**
2.4.1 Mini-PCIe Slot (PCIe and USB2.0 Signal) 27
2.4.2 M.2 B Key 3042/ 3052 & SIM Slots 29
2.4.3 Ignition Rotary Switch 31
2.4.4 M.2 M Key 2242 for NVMe SSD 32

3 System Installation

3.1 Disassembling the Enclosure **34**
3.2 Installing Internal Modules **36**
3.2.1 Installing Mini-PCIe Module (PCIe + USB Signal) 36
3.2.2 M. 2 B Key 3042/ 3052 & SIM Installation 38
3.3 Reinstalling the Enclosure **41**
3.4 Mounting the System **43**
3.5 Powering on the System **44**

4 Ignition Power Control

4.1 Principles of Ignition Power Control **45**
4.1.1 Additional Features of Ignition Power Control 46
4.1.2 Wiring Ignition Signal 47
4.1.3 Operation Modes of Ignition Power Control 48

5 Reflashing the System

5.1 Accessing the Port 50
5.2 Reflash/ Recovery 51

Legal Information

All Neousys Technology Inc. products shall be subject to the latest Standard Warranty Policy.

Neousys Technology Inc. may modify, update or upgrade the software, firmware or any accompanying user documentation without prior notice. Neousys Technology Inc. will provide access to these new software, firmware or documentation releases from download sections of our website or through our service partners.

Before installing any software, applications or components provided by a third party, customer should ensure that they are compatible and interoperable with Neousys Technology Inc. product by checking in advance with Neousys Technology Inc.. Customer is solely responsible for ensuring the compatibility and interoperability of the third party's products. Customer is further solely responsible for ensuring its systems, software, and data are adequately backed up as a precaution against possible failures, alternation, or loss.

For questions in regards to hardware/ software compatibility, customers should contact Neousys Technology Inc. sales representative or technical support.

To the extent permitted by applicable laws, Neousys Technology Inc. shall NOT be responsible for any interoperability or compatibility issues that may arise when (1) products, software, or options not certified and supported; (2) configurations not certified and supported are used; (3) parts intended for one system is installed in another system of different make or model.

Contact Information

Headquarters (Taipei, Taiwan)	**Neousys Technology Inc.** 15F, No.868-3, Zhongzheng Rd., Zhonghe Dist., New Taipei City, 23586, Taiwan Tel: +886-2-2223-6182 Fax: +886-2-2223-6183 Email, Website
Americas (Illinois, USA)	**Neousys Technology America Inc.** 3384 Commercial Avenue, Northbrook, IL 60062, USA Tel: +1-847-656-3298 Email, Website
China	**Neousys Technology (China) Ltd.** Room 612, Building 32, Guiping Road 680, Shanghai Tel: +86-2161155366 Email, Website

Notices

Copyright	All rights reserved. This publication may not be reproduced, transmitted, transcribed, stored in a retrieval system, or translated into any language or computer language, in any form or by any means, electronic, mechanical, magnetic, optical, chemical, manual or otherwise, without the prior written consent of Neousys Technology, Inc.
Disclaimer	This manual is intended to be used as an informative guide only and is subject to change without prior notice. It does not represent commitment from Neousys Technology Inc. Neousys Technology Inc. shall not be liable for any direct, indirect, special, incidental, or consequential damages arising from the use of the product or documentation, nor for any infringement on third party rights.
Patents and Trademarks	Neousys, the Neousys logo, Expansion Cassette, MezIO™ are registered patents and trademarks of Neousys Technology, Inc. Windows is a registered trademark of Microsoft Corporation. Intel®, Core™ are registered trademarks of Intel Corporation NVIDIA®, GeForce® are registered trademarks of NVIDIA Corporation All other names, brands, products or services are trademarks or registered trademarks of their respective owners.
FCC Conformity	This equipment has been tested and found to comply with the limits for a Class A digital device, pursuant to part 15 of the FCC Rules. These limits are designed to provide reasonable protection against harmful interference when the equipment is operated in a commercial environment. This equipment generates, uses, and can radiate radio frequency energy and, if not installed and used in accordance with the instruction manual, may cause harmful interference to radio communications. Operation of this equipment in a residential area is likely to cause harmful interference in which case the user will be required to correct the interference at his own expense.
CE Conformity	The product(s) described in this manual complies with all applicable European Union (CE) directives if it has a CE marking. For computer systems to remain CE compliant, only CE-compliant parts may be used. Maintaining CE compliance also requires proper cable and cabling techniques.

Safety Precautions

Read these instructions carefully before you install, operate, or transport the system.

- Install the system or DIN rail associated with, at a sturdy location
- Install the power socket outlet near the system where it is easily accessible
- Secure each system module(s) using its retaining screws
- Place power cords and other connection cables away from foot traffic.
- Do not place items over power cords and make sure they do not rest against data cables
- Shutdown, disconnect all cables from the system and ground yourself before touching internal modules
- Ensure that the correct power range is being used before powering the device
- Should a module fail, arrange for a replacement as soon as possible to minimize down-time
- If the system is not going to be used for a long time, disconnect it from mains (power socket) to avoid transient over-voltage

Service and Maintenance

- ONLY qualified personnel should service the system
- Shutdown the system, disconnect the power cord and all other connections before servicing the system
- When replacing/ installing additional components (expansion card, memory module, etc.), insert them as gently as possible while assuring proper connector engagement

ESD Precautions

- Handle add-on module, motherboard by their retention screws or the module's frame/ heat sink.
- Avoid touching the PCB circuit board or add-on module connector pins
- Use a grounded wrist strap and an anti-static work pad to discharge static electricity when installing or maintaining the system
- Avoid dust, debris, carpets, plastic, vinyl and styrofoam in your work area.
- Do not remove any module or component from its anti-static bag before installation

About This Manual

This manual introduces and describes how to setup/ install Neousys Technology NRU-171V-PPC/ NRU-172S-PPC featuring NVIDIA® Jetson Orin™ NX or Orin™ Nano SoM bundled with JetPack.

Revision History

Version	Date	Description
1.0	Oct. 2024	Initial release
1.1	Aug. 2026	Updated GPS_PPS_H voltage specifications

1 Introduction

The NRU-170-PPC series is an IP66-rated, 10.1” AI panel PC, powered by NVIDIA® Jetson Orin™ NX or Orin™ Nano, delivering up to 100 TOPS of AI processing capability. This series is tailored for edge AI applications that demand water resistance and human-machine interaction, including ADAS for off-highway vehicles, autonomous marine vessels, AI-driven inspection in food processing, smart livestock management, and precision agriculture.

NRU-171V-PPC

NRU-172S-PPC

Leveraging the NVIDIA® Jetson Orin™ NX, the NRU-170-PPC achieves superior AI inference, offering up to 100 sparse TOPS (INT8) and the ability to transcode up to 18 simultaneous 1080P video streams. The series also incorporates waterproof features at a competitive price point, accomplished through a refined mechanical design, the use of carefully selected waterproof connectors, and standardized cable kits. For adaptability in various semi-outdoor environments, the unit is equipped with a 10.1” touch panel boasting 1000 cd/m² brightness and a 1000:1 contrast ratio, with the added functionality of single-finger touch sensitivity in wet conditions.

The NRU-170-PPC series includes two models: the NRU-171V-PPC, supporting up to six GMSL2 automotive cameras with pre-integrated drivers for select cameras utilizing IMX390, ISX031, and IMX490 CMOS sensors; and the NRU-172S-PPC, which offers four PoE+ GbE ports for IP or industrial GigE cameras. Additionally, a waterproof GbE port is provided for interfacing with external computers or LiDAR. The NRU-170-PPC is designed as a compact, all-in-one edge AI platform that simplifies in-vehicle cabling. It supports an 8V to 35V wide-range DC input, ignition power control, a CAN FD bus port, and an RS232 port. Expansion options include a mini-PCIe socket for CAN/ COM/ WiFi modules and an M.2 B-key socket for 4G LTE/ 5G NR communication modules.

By integrating a 10.1” touch panel, IP66 rating, Orin NX AI performance, and comprehensive onboard camera connectivity, the NRU-170-PPC strikes an optimal balance between ruggedness, performance, cost efficiency, and ease of deployment. It represents a cutting-edge edge AI solution for applications in smart agriculture, mining, construction, smart animal husbandry, edge inspection, and outdoor autonomous mobile robots (AMRs).

1.1 NRU-171V-PPC Specification

System Core		
Processor	NVIDIA® Jetson Orin™ NX system-on-module (SOM), comprising NVIDIA® Ampere GPU and ARM Cortex CPU	NVIDIA® Jetson Orin™ Nano system on-module (SOM), comprising NVIDIA® Ampere GPU and ARM Cortex CPU
Memory	16GB/ 8GB LPDDR5 @ 3200 MHz on SOM	8GB/ 4GB LPDDR5 @ 2133 MHz on SOM
Display panel		
Panel	10.1” touch screen with 1920 x 1200 resolution, 1000 cd/m2 brightness, and 1000:1 high contrast ratio	
Touch	Single-finger touch functionality when the screen is wet, with optical bonding, AG (Anti-Glare) and AF (Anti-Fingerprint) glass treatment	
Panel I/O Interface		
GMSL2	6x waterproof GMSL2 FAKRA Z connectors, supporting multiple configurations: Configuration A. 6x AC-IMX390 (2MP@30FPS) Configuration B. 6x AC-ISX031 (3MP@30FPS) Configuration C. 4x AC-IMX490 (5MP@30FPS)	
Ethernet	1x Gigabit Ethernet port via M12 X-coded 8-pin connector	
USB	2x USB 2.0 ports via M12 A-coded 8-pin connector 1x USB Type C port (for system flashing and OTG, under service door)	
Serial port	1x RS-232 port via M12 A-coded 8-pin connector	
CAN bus	1x CAN FD port via M12 A-coded 8-pin connector	
Isolated DIO	1x isolated GPS PPS input via M12 A-coded 8-pin connector	
Internal I/O Interface		
Mini PCI Express	1x full-size mini PCI Express socket (PCIe + USB 2.0)	
M.2	1x M.2 3042/3052 B key (USB 3.2 Gen 1 + USB 2.0) for LTE/5G module with dual micro SIM support	
Storage		

M.2 NVMe	1x M.2 2242 M key socket (PCIe Gen 3x1) for NVMe SSD
Power Supply	
DC Input	8V to 35V DC input and ignition power control via M12 A-coded, 5-pin connector (IGN/ GND/ V+) *
Mechanical	
Dimension	257 mm (W) x 65 mm (D) x 176 mm (H)
Weight	3.8 kg
Mounting	VESA 75 mount (standard)
Environmental	
Operating Temperature	-25°C to 60°C with passive cooling (MAXN TDP mode) **
	With CPU + GPU under full load: NRU-170-PPC non-throttling a 60°C with 25W TDP mode (Orin NX MAXN)
Storage Temperature	-40°C to 85°C
Humidity	10% to 90%, non-condensing
Vibration	MIL-STD-810H, Method 514.8, Category 4
Shock	MIL-STD-810H, Method 516.8, Procedure I
EMC	CE/ FCC Class A, according to EN 55032 & EN 55035

* The required DC input range is 8V to 35V when the system load is under 60W. The required DC input range is 12V to 35V when the system load is between 60W to 96W. The required DC input range is 20V to 35V when the system load is between 96W to 160W.

** For sub-zero and over 60°C operating temperature, a wide temperature HDD or Solid State Disk (SSD) is required.

1.2 NRU-172S-PPC Specification

System Core		
Processor	NVIDIA® Jetson Orin™ Nano system-on-module (SOM), comprising NVIDIA® Ampere GPU and ARM Cortex CPU	NVIDIA® Jetson Orin™ Nano system on-module (SOM), comprising NVIDIA® Ampere GPU and ARM Cortex CPU
Memory	8GB/ 4GB LPDDR5 @ 2133 MHz on SOM	8GB/ 4GB LPDDR5 @ 2133 MHz on SOM
Display Panel		
Panel	10.1” touch screen with 1920 x 1200 resolution, 1000 cd/m2 brightness, and 1000:1 high contrast ratio	
Touch	Single-finger touch functionality when the screen is wet, with optical bonding, AG (Anti-Glare) and AF (Anti-Fingerprint) glass treatment	
Panel I/O Interface		
Ethernet	Port 0: 1x Gigabit Ethernet port via M12 X-coded 8-pin connector Port 1 to Port 4: 4x GbE ports by Intel® I350-AM4 via M12 X-coded 8-pin connector	
PoE+	IEEE 802.3at PoE+ PSE for Port 1 to Port 4 with 50W total power budget	
USB	2x USB 2.0 ports via M12 A-coded 8-pin connector 1x USB Type C port (for system flashing and OTG, under service door)	
Serial port	1x RS-232 port via M12 A-coded 8-pin connector	
CAN bus	1x CAN FD port via M12 A-coded 8-pin connector	
Isolated DIO	1x isolated GPS PPS input via M12 A-coded 8-pin connector	
Internal I/O Interface		
Mini PCI Express	1x full-size mini PCI Express socket (PCIe + USB 2.0)	
M.2	1x M.2 3042/3052 B key (USB 3.2 Gen 1 + USB 2.0) for LTE/5G module with dual micro SIM support	
Storage		
M.2 NVMe	1x M.2 2242 M key socket (PCIe Gen 3x1) for NVMe SSD	

Power Supply	
DC Input	8V to 35V DC input and ignition power control via M12 A-coded, 5-pin connector (IGN/ GND/ V+) *
Mechanical	
Dimension	257 mm (W) x 65 mm (D) x 176 mm (H)
Weight	3.8 kg
Mounting	VESA 75 mount (standard)
Environmental	
Operating Temperature	-25°C to 60°C with passive cooling (MAXN TDP mode) **
	With CPU + GPU under full load: NRU-170-PPC non-throttling a 60°C with 25W TDP mode (Orin NX MAXN)
Storage Temperature	-40°C to 85°C
Humidity	10% to 90%, non-condensing
Vibration	MIL-STD-810H, Method 514.8, Category 4
Shock	MIL-STD-810H, Method 516.8, Procedure I
EMC	CE/ FCC Class A, according to EN 55032 & EN 55035 EN 50121-3 (EN 50155:2017, Clause 13.4.8)

* The required DC input range is 8V to 35V when the system load is under 60W. The required DC input range is 12V to 35V when the system load is between 60W to 96W. The required DC input range is 20V to 35V when the system load is between 96W to 160W.

** For sub-zero and over 60°C operating temperature, a wide temperature HDD or Solid State Disk (SSD) is required.

1.3 Dimensions

> NOTE
>
> *Both systems share the same dimensions. Therefore, NRU-171V-PPC will be used for dimension demonstration purposes.*
>
> *All measurements are in millimeters (mm).*

1.3.1 Front View

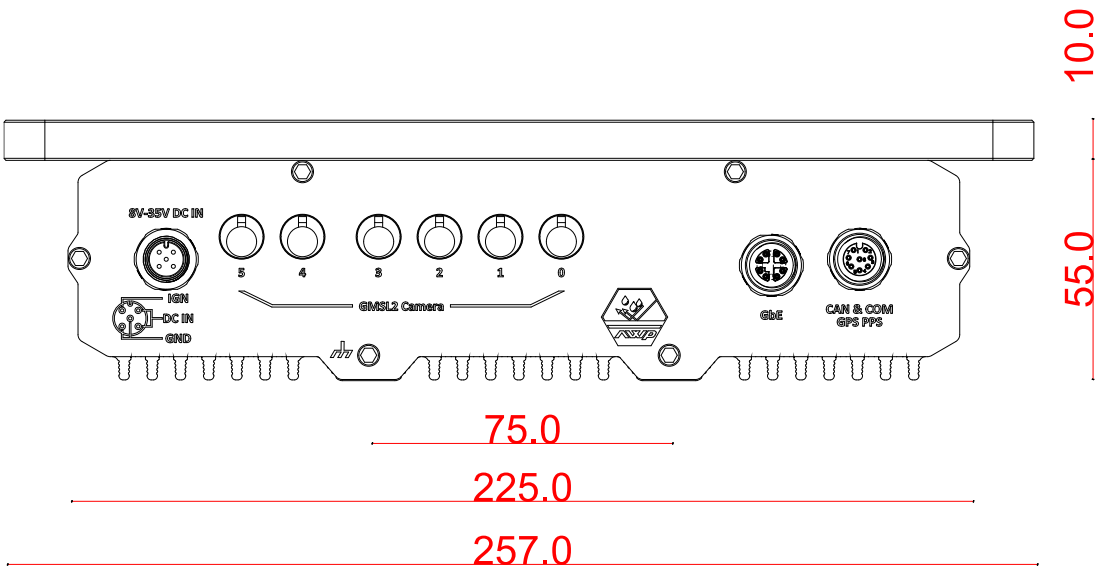

1.3.2 Top view

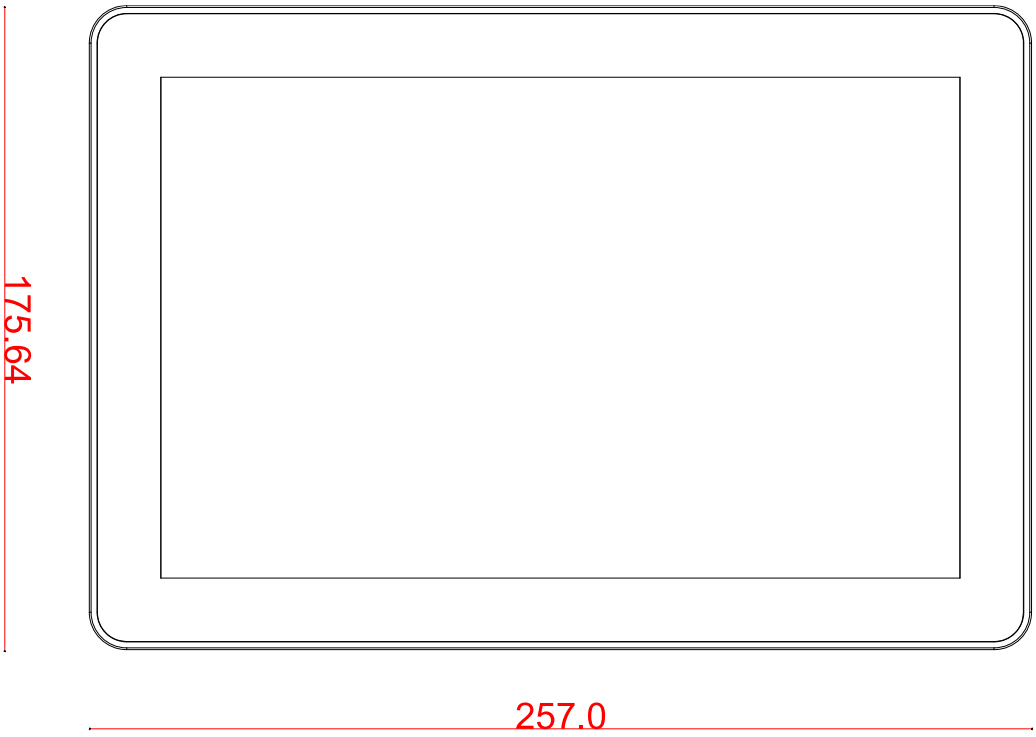

1.3.3 Side view

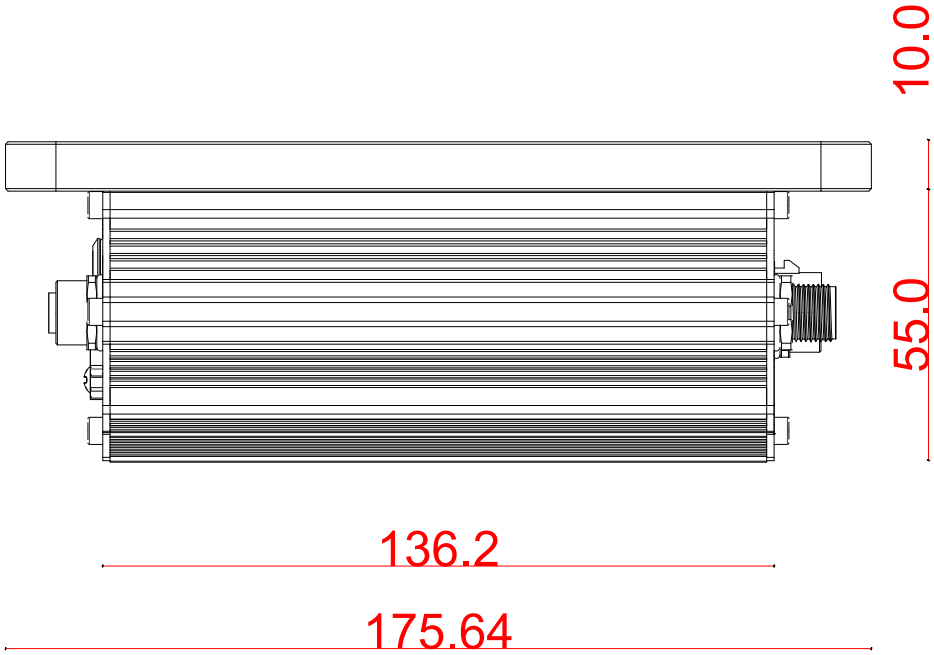

1.3.4 Bottom view

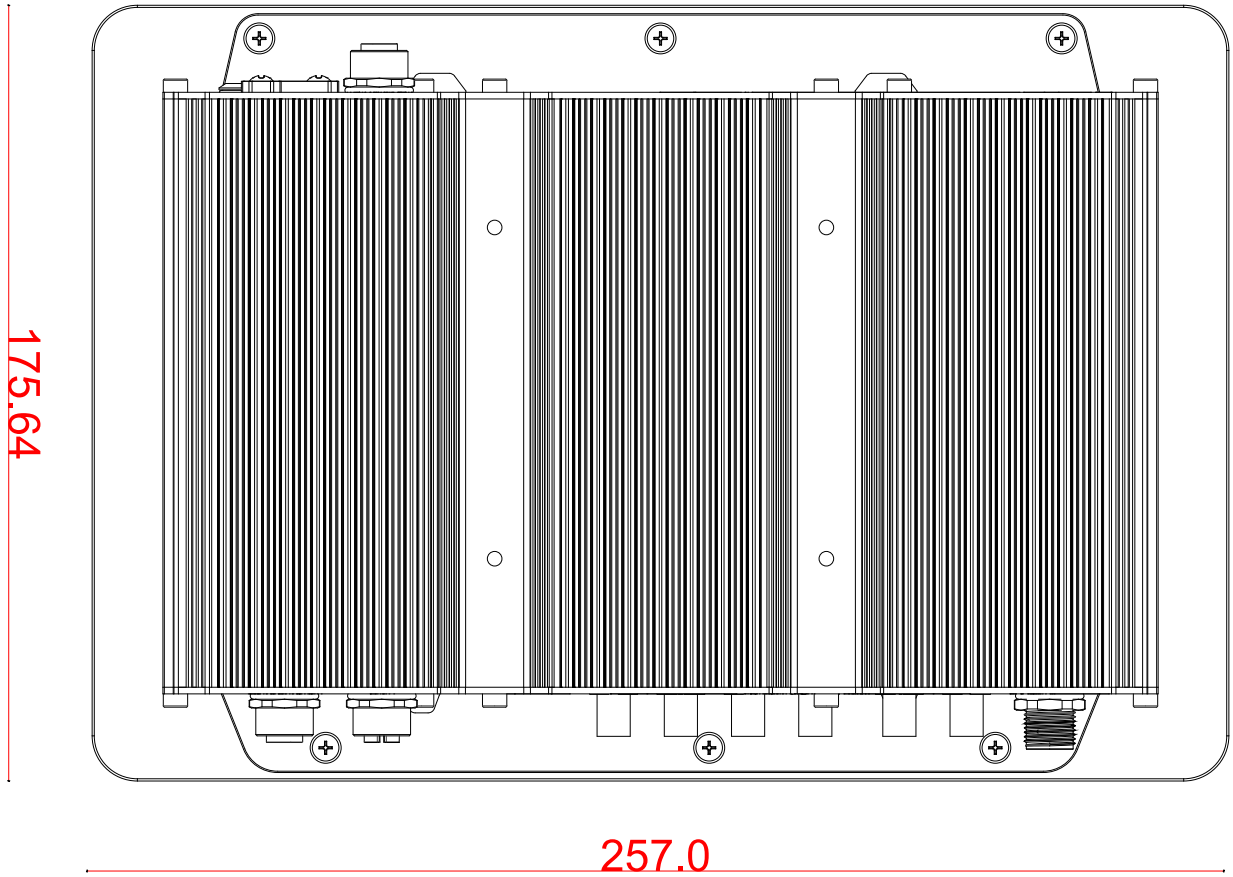

2 Setting Up Your NRU-170-PPC

2.1 Unpacking Your System

Upon receiving the NRU-170-PPC system, please check immediately if the package contains all the items listed in the following table. If any item is missing or damaged, please contact your local dealer or Neousys Technology.

Item	Description	Qty
1	NRU-170-PPC system	1
2	Cable M12 A-code 5P FML to Cord End Terminal 3P 180cm M12 DC input and ignition cable	1
3	Splicing Connector w/Lever 2-Pole inline for easy cabling with M12 DC input and ignition cable	3
4	Standoff, M3-5, H6.5, L4 for M.2 B key module installation	1
5	Screw pack	1

2.2 Front I/O Panel

NRU-171V-PPC

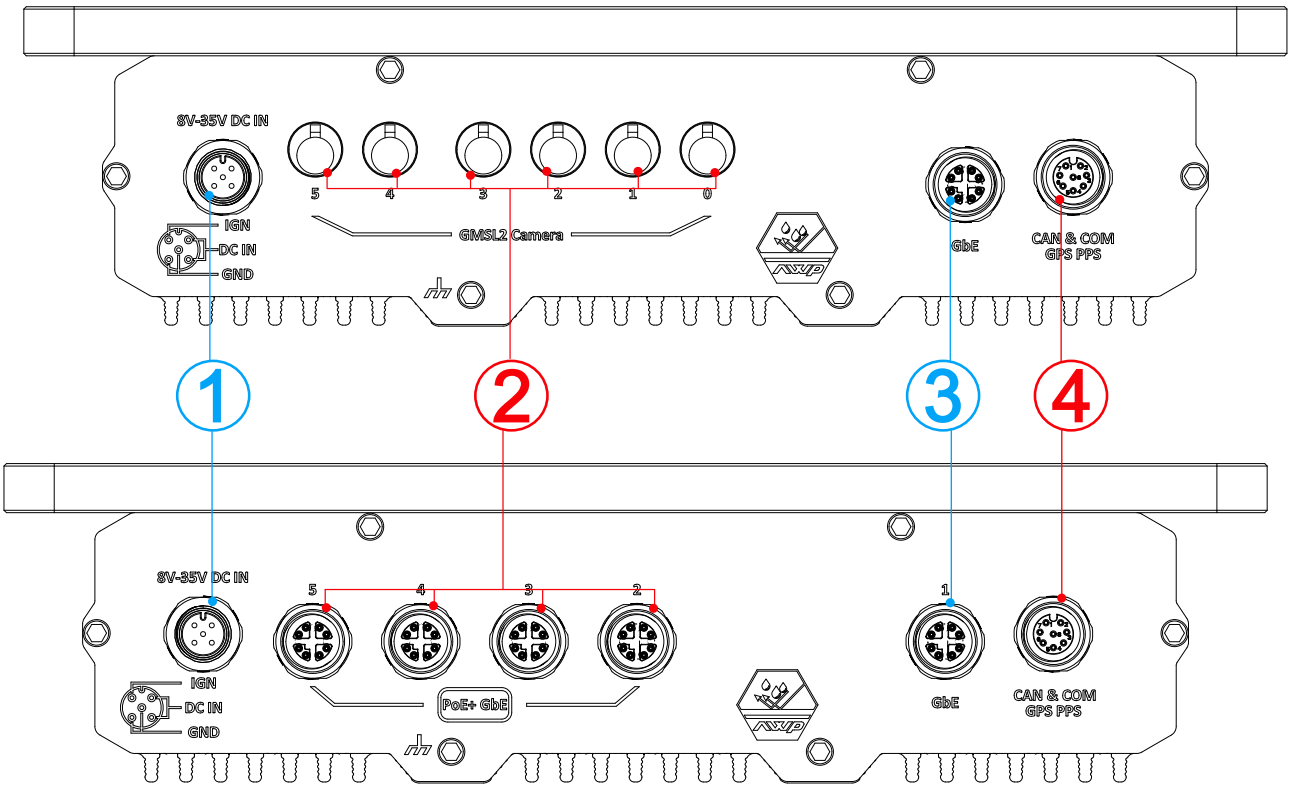

NRU-172S-PPC

No.	Item	Description
1.	M12 A-coded 5-pin connector with ignition power control	Supports 8V to 35V DC input and ignition power control (4A maximum current input per pin).
2.	FAKRA Z connectors (NRU-171V-PPC)	Supports GMSL2 cameras
	PoE+ ports (NRU-172S-PPC)	The M12 X-coded Power over Ethernet ports (IEEE 802.3at PoE+ PSE) provide both data connection and electric power to devices (eg. IP camera), and offers a total power budget of 50W.
3.	M12 X-coded Gigabit Ethernet	The M12 X-coded Ethernet provides rugged connectivity up to 1Gbps.
4.	M12 A-coded CAN, COM & GPS PPS (DI)	1x CAN FD,1x RS232 and GPS PPS (digital input)

2.2.1 M12 A-coded DC-in Port with Ignition Power Control

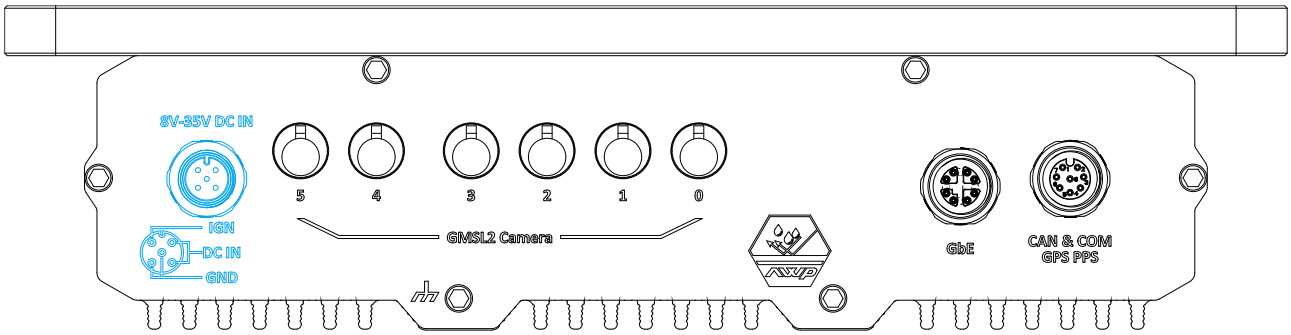

The system accepts a wide range of DC power input from 8V to 35V via a M12 A-coded connector. The M12 A-coded connectors offer COTS availability and ultra-rugged connection reliability when wiring DC power.

WARNING

Please make sure the voltage of DC power is correct before you connect it to the system. Supplying a voltage over 35V will damage the system.

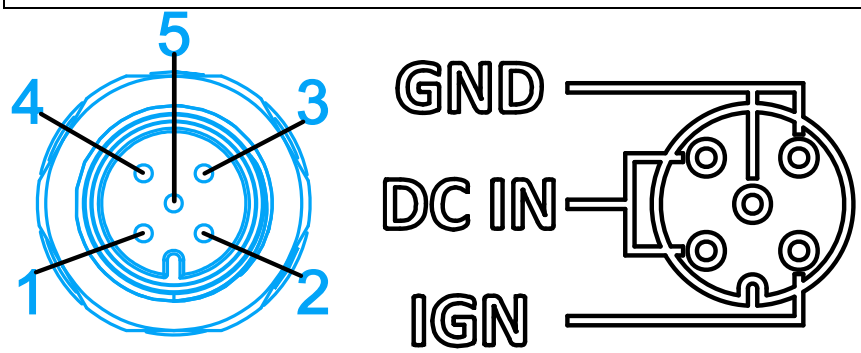

Pin No.	Signal	Wire color
1	V+	
2	IGN	
3	GND	
4	V+	
5	GND	

2.2.2 FAKRA Z Connector for GMSL2 Camera (NRU-171V-PPC Only)

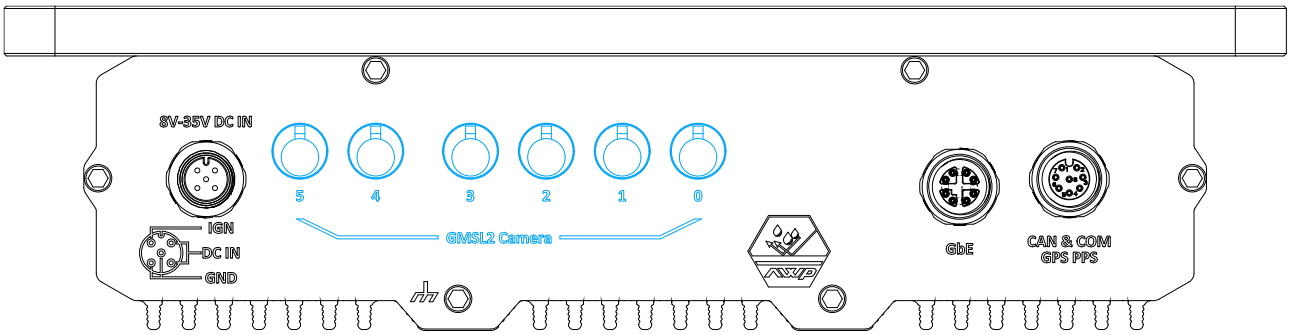

Fachkreis Automobil (FAKRA) connector is a German standard for SubMiniature version B based automotive-grade connectors. There are six FAKRA Z connectors on the rear panel side to connect to automotive GMSL2 cameras.

Due to their advanced features such as IP67 waterproof, high dynamic range (120dB HDR), auto white balance (AWB), and LED flicker mitigation (LFM), automotive GMSL2 cameras are ideal for autonomous vehicle applications.

2.2.3 Power Over Ethernet + (NRU-172S-PPC Only)

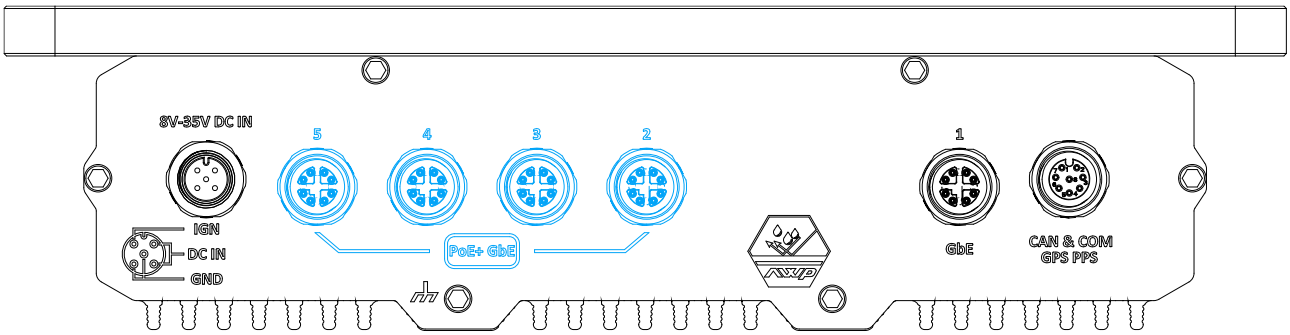

The system offers four Power over Ethernet ports utilizing Intel® I350-AM4 via an M12 X-coded, 8-pin connector. The combined total power budget is 50W.

Connector Pin Definition

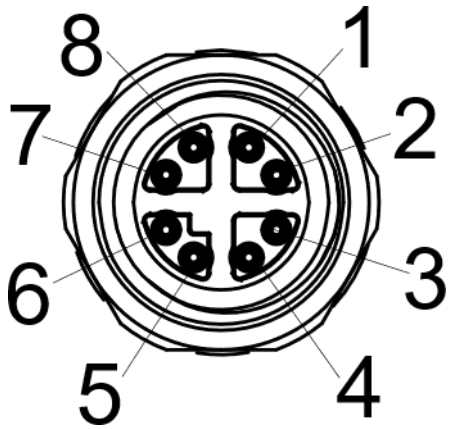

Panel side

Cable connector end

Signal	M12 panel side	M12 cable connector end	Wire color
LAN P3	1	1	
LAN N3	2	2	
LAN N2	3	3	
LAN P2	4	4	
LAN P0	5	5	
LAN N0	6	6	
LAN P1	7	7	
LAN N1	8	8	

2.2.4 M12 X-coded Gigabit Ethernet

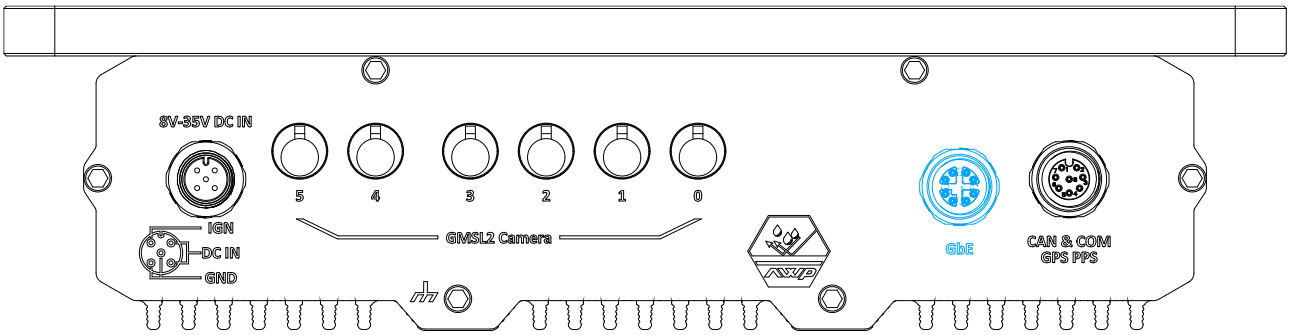

The system offers one Gigabit Ethernet port, implemented via M12 X-coded connector on the I/O panel.

Connector Pin Definition

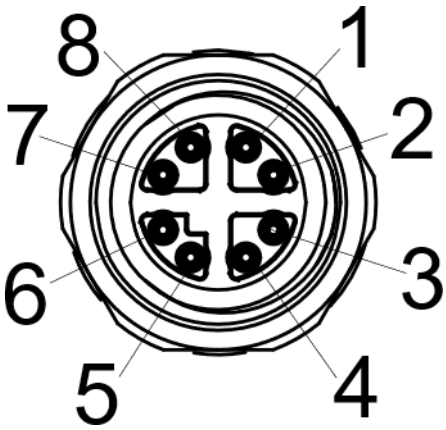

Panel side

Cable connector end

Signal	M12 panel side	M12 cable connector end	Wire color
LAN P3	1	1	
LAN N3	2	2	
LAN N2	3	3	
LAN P2	4	4	
LAN P0	5	5	
LAN N0	6	6	
LAN P1	7	7	
LAN N1	8	8	

2.2.5 M12 A-coded CAN FD, COM & DI (GPS PPS)

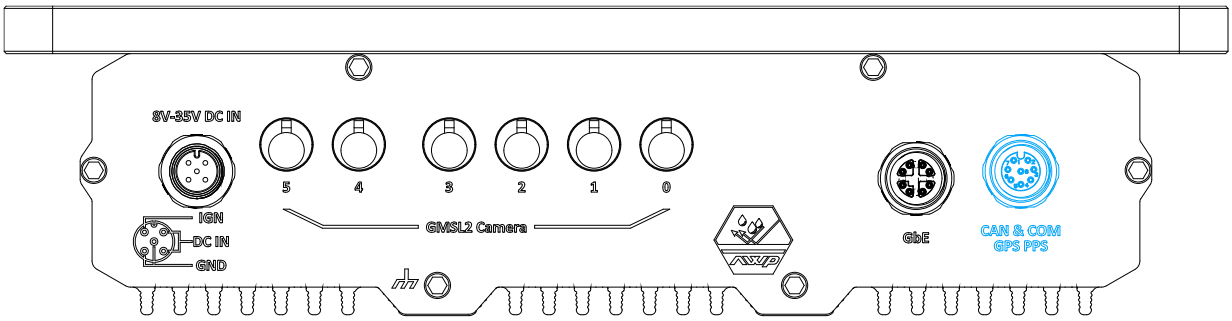

The connector includes one CAN FD, one RS232 COM port, and a GPS PPS input signal. The CAN FD features bandwidth up to 8x that of CAN 2.0, and is a robust industrial bus with a pair of differential signals and is commonly used in various industrial and in-vehicle applications.

The COM port is a 3-wire RS-232 specification and provides up to 115200 bps baud rate.

The GPS PPS input aims to receive the PPS signal from an external GPS module. With the NMEA data and the GPS PPS from the external GPS module, the system will be synchronized with GPS time. Please refer to the following table for information on wiring and programming the isolated DIO channels.

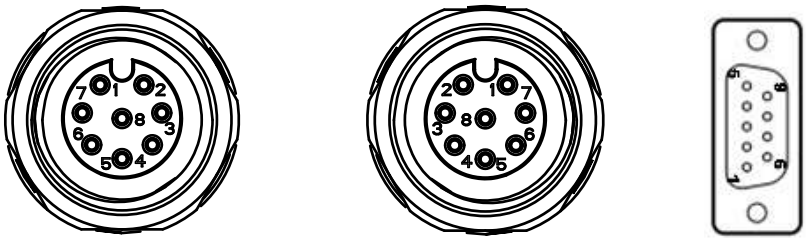

M12 Panel side		M12 Cable end	DB9 end	Signal
Signal	**M12 panel pin**	**M12 cable pin**	**COM pin**	
CAN0_H	1	1	3	CAN0
CAN0_GND	2	2	2	
CAN0_L	3	3	5	
GPS_PPS_H	4	4	Open Wire_Red	GPS PPS
GPS_PPS_L	5	5	Open Wire_Black	
COM0_GND	6	6	5	COM0
COM0_RX	7	7	2	
COM0_TX	8	8	3	

NOTE

*Effective with September 2026 shipments, the GPS_PPS_H input voltage range for **NRU-170-PPC** models has been modified to 3.3V – 12V to accommodate common PPS signal voltages from GPS modules.*

2.3 Rear I/O Panel

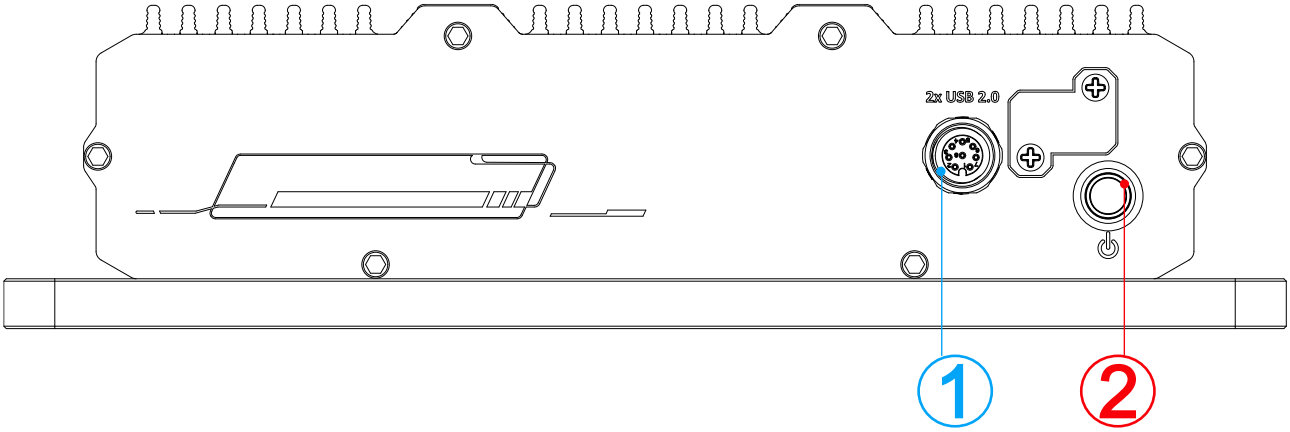

No.	Item	Description
1.	M12 A-coded USB 2.0 ports	The M12 A-coded USB 2.0 port is backward-compatible with USB 1.1 / 1.0.
2.	Power button	Press the button to turn on/ off the system.

2.3.1 M12 A-coded USB 2.0 Port

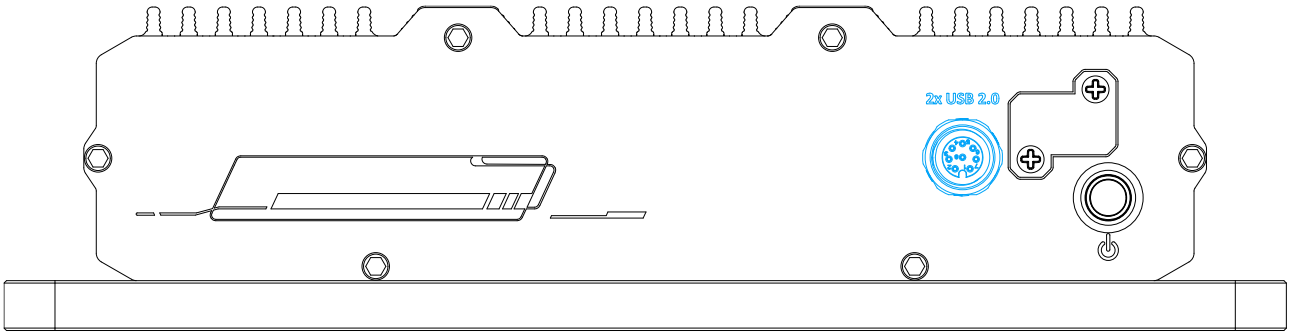

The USB2.0 ports are implemented via native xHCI (eXtensible Host Controller Interface) and are backward compatible with USB 1.1 and USB 1.0 devices. UEFI USB support is also provided so you can use USB keyboard/ mouse in UEFI shell environment.

xHCI driver is supported natively in Windows 10, therefore you do not need to install xHCI driver to utilize USB functions.

Connector Pin Definition

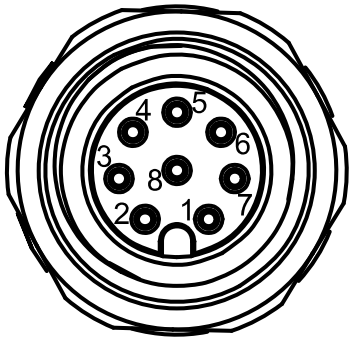

Panel side

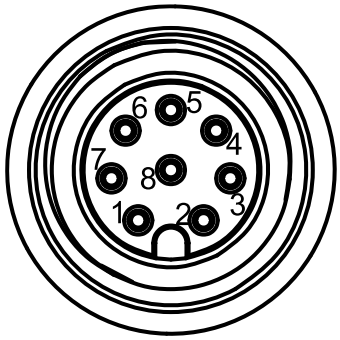

Cable connector end

Signal	M12 panel side	M12 cable connector end	Wire color
D1+	1	1	
D1-	2	2	
VCC_USB	3	3	
GND	4	4	
GND	5	5	
VCC_USB	6	6	
D2-	7	7	
D2+	8	8	

2.3.2 Power Button

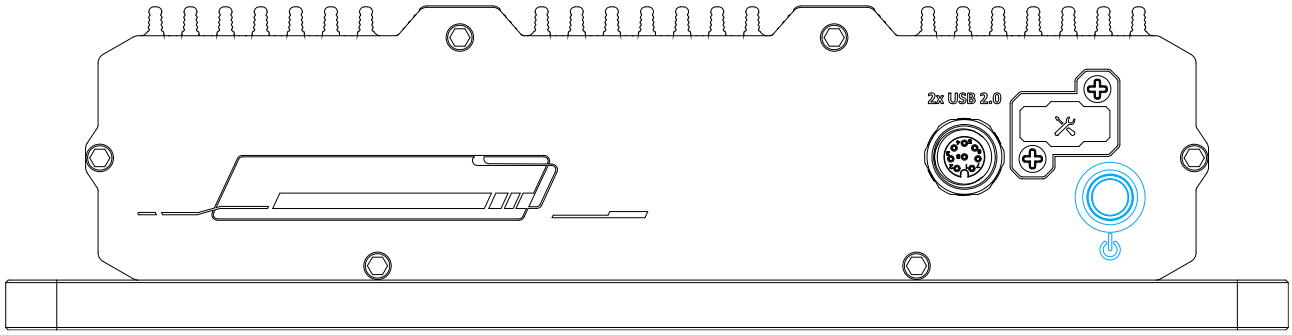

The power button is a non-latched switch for ATX mode on/off operation. Press to turn on the system, the button should light up and to turn off, you can either issue a shutdown command in the OS, or just press the power button. In case of system halts, you can press and hold the power button for 5 seconds to force-shutdown the system. Please note that there is a 5 seconds interval between two on/off operations (i.e. once turning off the system, you will need to wait for 5 seconds to initiate another power-on operation).

2.4 Internal I/Os

NOTE

NRU-170-PPC series systems share the same internal I/O.

2.4.1 Mini-PCIe Slot (PCIe and USB2.0 Signal)

The mini-PCIe socket (in **blue**) accepts off-the-shelf mini-PCIe modules. You can add additional features to your system such as WiFi, GPS, etc.

NOTE

If the module is installed after the initial purchase, you may need to contact Neousys Technology or an authorized distributor for a customized panel with the required number of waterproof SMA antenna holes.

mini-PCIe Pin Definition

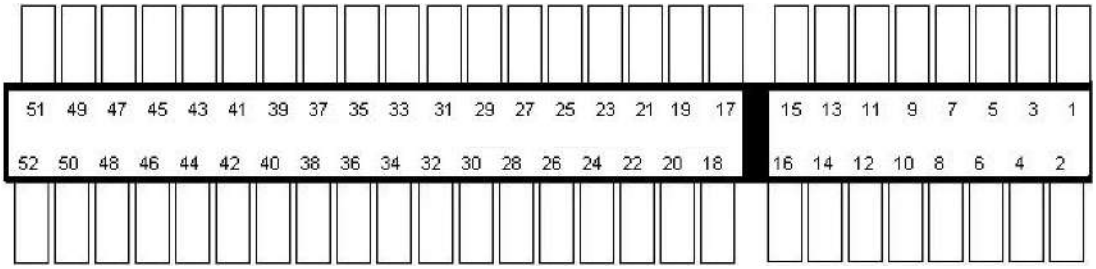

Pin #	Signal	Pin #	Signal
1	-	2	+3.3V
3	-	4	GND
5	-	6	+1.5V
7	-	8	UIM_PWR
9	GND	10	UIM_DATA
11	REFCLK-	12	UIM_CLK
13	REFCLK+	14	UIM_RST
15	GND	16	UIM_SPU
Mechanical Key			
17	-	18	GND
19	-	20	-
21	GND	22	PERST#
23	PERn0	24	+3.3V
25	PERp0	26	GND
27	GND	28	+1.5V
29	GND	30	-
31	PETn0	32	-
33	PETp0	34	GND
35	GND	36	USB_D-
37	GND	38	USB_D+
39	+3.3V	40	GND
41	+3.3V	42	-
43	GND	44	-
45	-	46	-
47	-	48	+1.5V
49	-	50	GND
51	-	52	+3.3V

WARNING

Some off-the-shelf mini-PCIe 4G modules are not compliant to standard mini-PCIe interface. They use 1.8V I/O signals instead of standard 3.3V I/O and may have signal conflict. Please consult with Neousys for compatibility when in doubt!

2.4.2 M.2 B Key 3042/ 3052 & SIM Slots

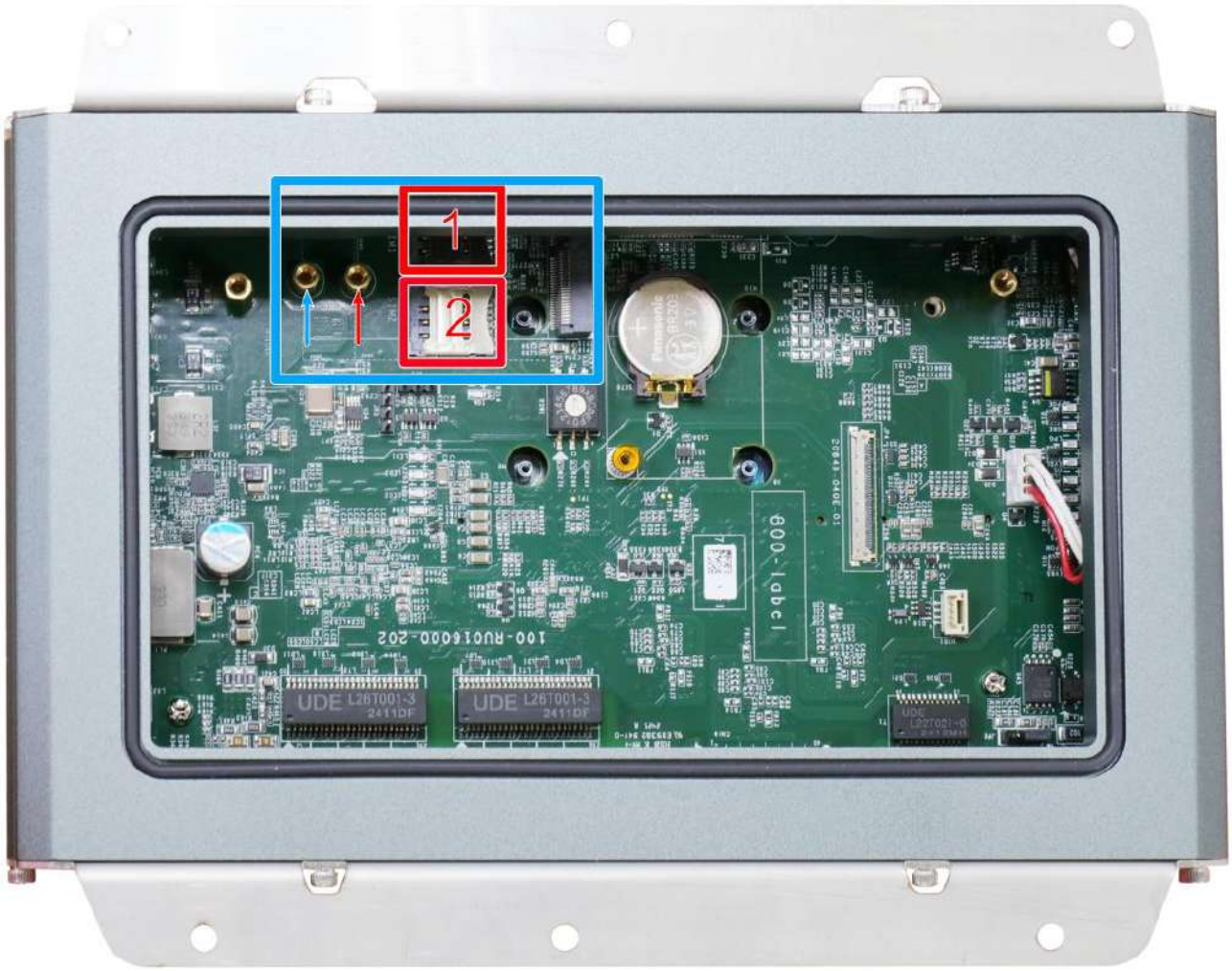

The system has an M.2 3042/ 3052 slot (indicated in **blue rectangle**) with dual SIM slots (indicated in **red rectangle**) supporting 5G/ 4G. A copper standoff is provided for you to secure onto the motherboard into the **red arrow** location for an M.2 2242/ 3042 module, or into the **blue arrow** location for an M.2 3052 module. By installing a 5G or 4G M.2 module and SIM card, you can access the internet via the provider's network.

NOTE

If the module is installed after the initial system purchase, you may need to contact Neousys Technology or an authorized distributor for a customized panel with the required number of waterproof SMA antenna holes.

M.2 (B Key) Slot Pin Definition

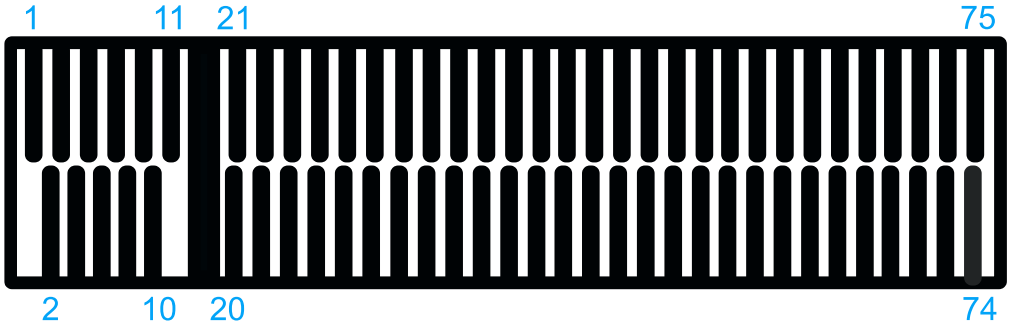

Pin #	Signal	Pin #	Signal
1	-	**2**	+3V3
3	GND	**4**	+3V3
5	GND	**6**	-
7	USB_D+	**8**	-
9	USB_D-	**10**	-
11	GND		
Mechanical Key			
21	-	**20**	-
23	-	**22**	-
25	-	**24**	-
27	GND	**26**	-
29	USB3.0-RX-	**28**	-
31	USB3.0-RX+	**30**	UIM1-RESET
33	GND	**32**	UIM1-CLK
35	USB3.0-TX-	**34**	UIM1-DATA
37	USB3.0-TX+	**36**	UIM1-PWR
39	GND	**38**	-
41	-	**40**	-
43	-	**42**	UIM2-DATA
45	GND	**44**	UIM2-CLK
47	-	**46**	UIM2-RST
49	-	**48**	UIM2-PWR
51	GND	**50**	PERST_N
53	-	**52**	-
55	-	**54**	-
57	GND	**56**	-
59	-	**58**	-
61	-	**60**	-
63	-	**62**	-
65	-	**64**	-
67	RESET_N	**66**	-
69	-	**68**	-
71	GND	**70**	+3V3
73	GND	**72**	+3V3
75	-	**74**	+3V3

2.4.3 Ignition Rotary Switch

The ignition power control switch features multiple modes for pre and post ignition settings. Please refer to the section Ignition Power Control for details.

2.4.4 M.2 M Key 2242 for NVMe SSD

The system has a Gen3 x1 PCIe M.2 2242 slot with a pre-installed NVMe SSD. The PCIe Gen3 x1 slot features a maximum speed of 8Gbps (1GB/s).

M.2 (M Key) Slot Pin Definition

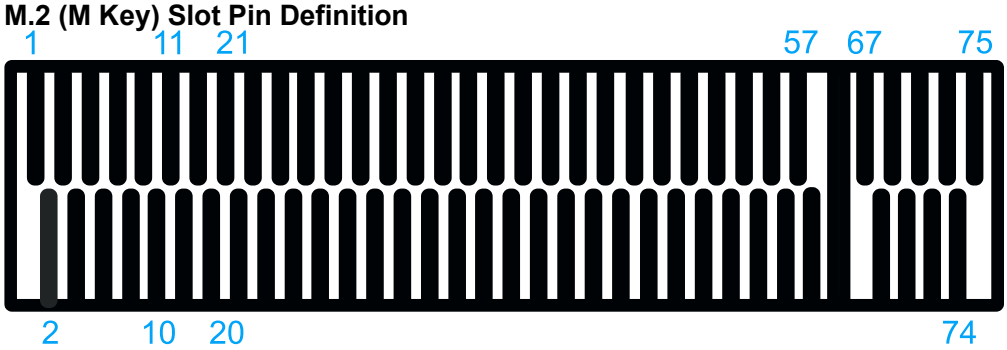

Pin #	Signal	Pin #	Signal
1	GND	2	+3V3
3	GND	4	+3V3
5	-	6	-
7	-	8	-
9	GND	10	-
11	-	12	+3V3
13	-	14	+3V3
15	GND	16	+3V3
17	-	18	+3V3
19	-	20	-
21	GND	22	-
23	-	24	-
25	-	26	-
27	GND	28	-
29	-	30	-
31	-	32	-
33	GND	34	-
35	-	36	-
37	-	38	-
39	GND	40	-
41	PERn0	42	-
43	PERp0	44	-
45	GND	46	-
47	PETn0	48	-
49	PETp0	50	PERST_N
51	GND	52	-
53	REFCLKN	54	-
55	REFCLKP	56	-
57	GND	58	-
Mechanical Key			
67	-	68	-
69	PEDET	70	+3V3
71	GND	72	+3V3
73	GND	74	+3V3
75	GND		

3 System Installation

Before disassembling the system enclosure and installing the card, please read the following instructions:

- **DO NOT** remove the card out of the anti-static until you are ready to install it into the system.
- It is recommended that only qualified service personnel should install and service this product to avoid injury or damage to the system.
- Please observe all ESD procedures at all times to avoid damaging the equipment.
- Before disassembling your system, please make sure the system has powered off, all cables and antennae (power, video, data, etc.) are disconnected.
- Place the system on a flat and sturdy surface (remove from mounts or out of server cabinets) before proceeding with the installation/ replacement procedure.

NOTE

Due to waterproof IP66 rating, for the installation/ replacement of following items, please contact Neousys Technology or an authorized dealer

1. *NVIDIA® Jetson module replacement*
2. *M.2 2242 NVMe SSD replacement*
3. *Wireless module (WiFi, 5G, 4G, etc.) requiring SMA antenna installation.*

3.1 Disassembling the Enclosure

1. Remove the screws holding the touch screen panel onto the enclosure.

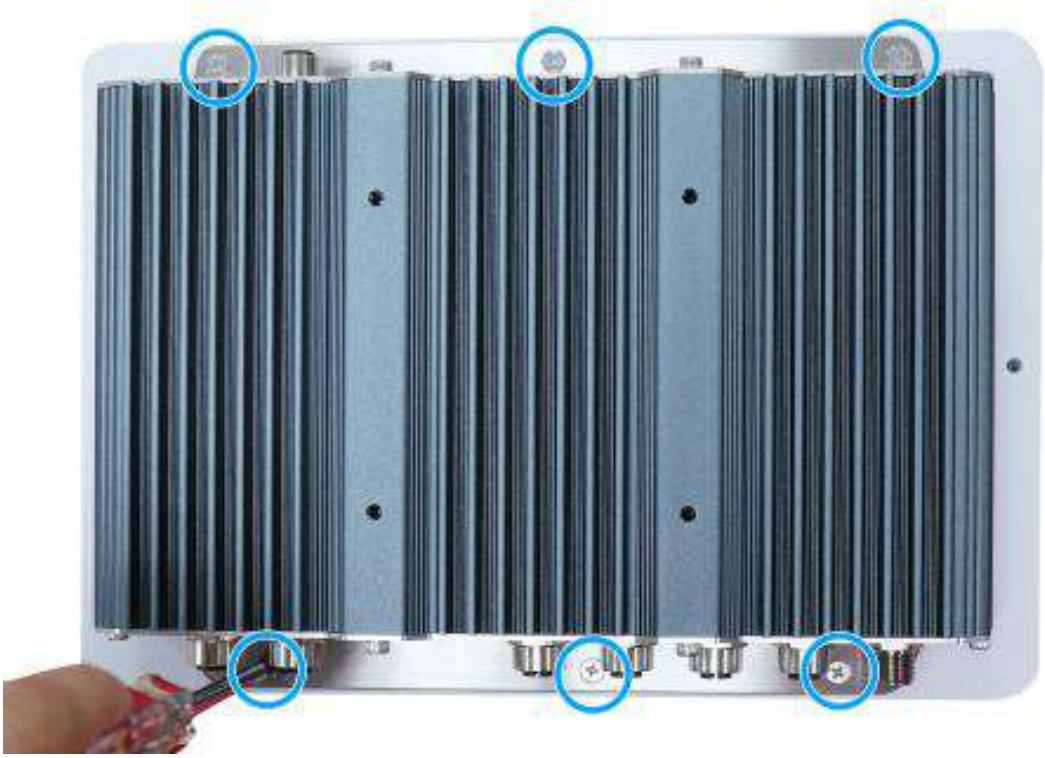

2. Gently separate the touch screen panel from the enclosure.

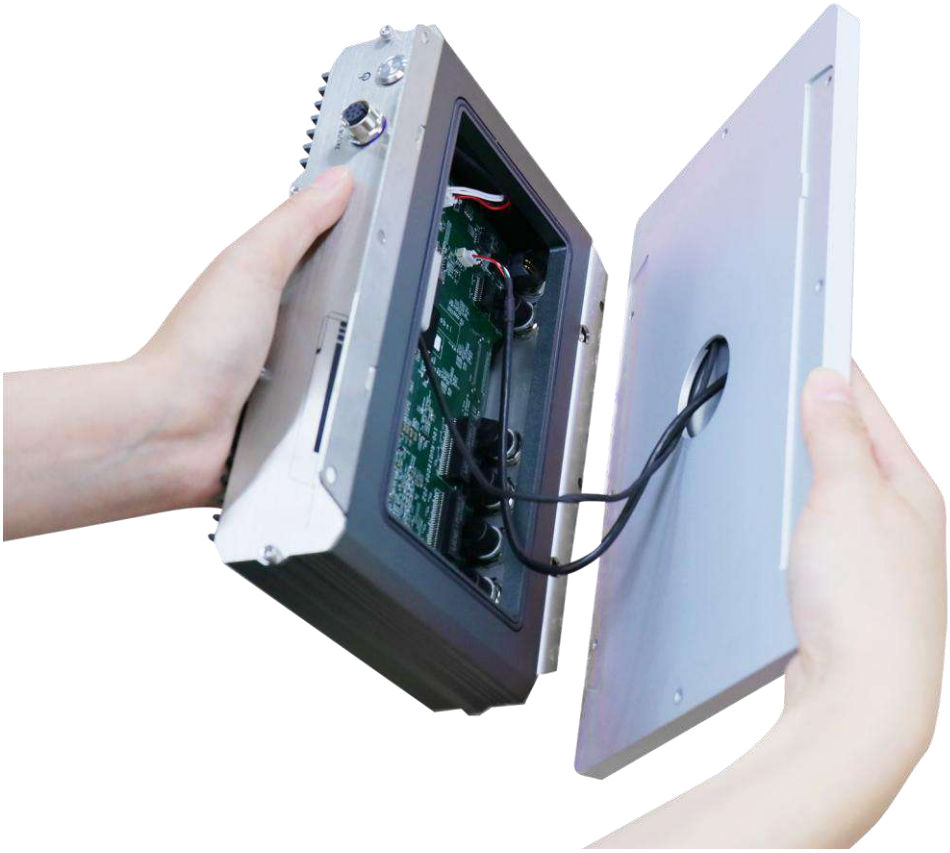

3. Remove the screws indicated to access the onboard expansion slots. The touch panel has been disconnected and removed for demonstration purposes. You **DO NOT** need to disconnect the touch panel to install internal components.

4. Gently lift and remove the heatspreader to gain access to the expansion slots.

3.2 Installing Internal Modules

NOTE

Due to waterproof IP66 rating, for SMA antenna installation, please contact Neousys Technology or your authorized dealer for compatible enclosure panel.

3.2.1 Installing Mini-PCIe Module (PCIe + USB Signal)

There is a mini-PCIe slot for the system to install a WiFi wireless module. Please follow the procedures below for installation.

1. Disassemble the system enclosure.
2. The mini-PCIe slot can be located once the enclosure has been removed.

3. Install the mini-PCIe card by inserting it at a 45° angle, and secure it with a screw.

Insert at 45° angle

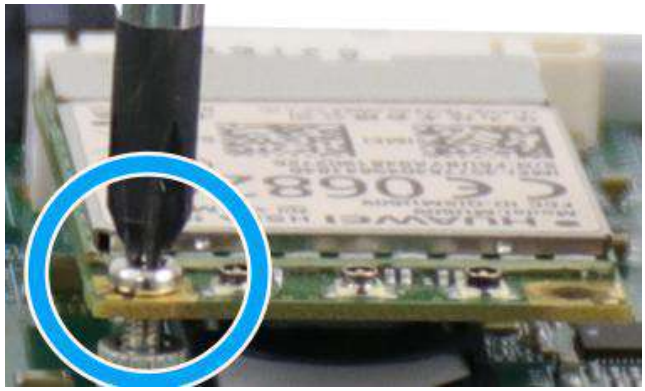

Secure with a screw

4. Connect Clip on the IPEX-to-SMA cable to the module and secure the antenna to the front or rear panel. Please refer to the module's manual for clip-on connection.

Clip on IPEX-to-SMA cable

> **NOTE**
>
> *Due to waterproof IP66 rating, for SMA antenna installation, please contact Neousys Technology or your authorized dealer for compatible enclosure panel.*

5. Reinstall the heatspreader.

Place heatsink back on the modules

Secure with screws indicated

6. Reinstall the enclosure.
7. If you need to install other components, please refer to respective sections.

3.2.2 M. 2 B Key 3042/ 3052 & SIM Installation

NOTE

Due to waterproof IP66 rating, for SMA antenna installation, please contact Neousys Technology or your authorized dealer for compatible enclosure panel.

There is one M.2 2242/ 3052 B key module expansion slot for system to install a 5G/ LTE wireless communication module. Please follow the procedures below to install the module.

1. Disassemble the system enclosure.
2. The M.2 3042/ 3052 B key and SIM slot can be located once the enclosure has been removed.

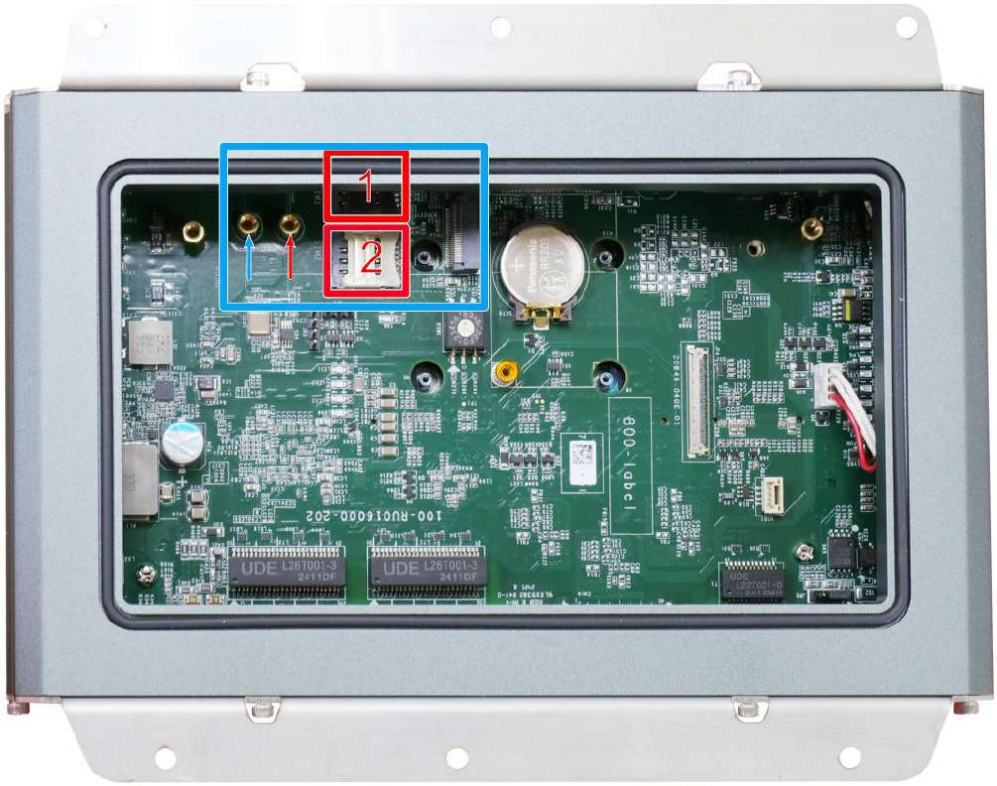

The system has an M.2 3042/ 3052 slot (indicated in **blue rectangle**) with dual SIM slots (indicated in **red rectangle**) supporting 5G/ 4G. A copper standoff is provided for you to secure onto the motherboard into the **red arrow** location for an M.2 2242/ 3042 module, or into the **blue arrow** location for an M.2 3052 module. By installing a 5G or 4G M.2 module and SIM card, you can access the internet via the provider's network.

NOTE

If the module is installed after the initial purchase, you may need to contact Neousys Technology or an authorized distributor for a customized panel with the required number of waterproof SMA antenna opening.

3. If you are installing a 5G/ 4G wireless module that requires a SIM card, please install the SIM card first by pushing the SIM slot holder in the direction shown (OPEN), and flip open the holder to place the SIM into the slot. Otherwise go to the next step.

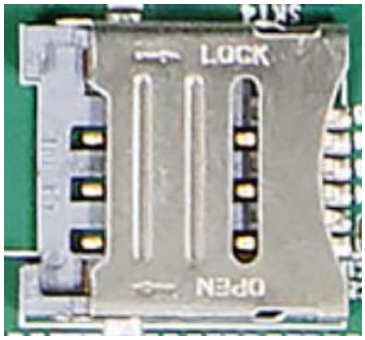

Push SIM holder

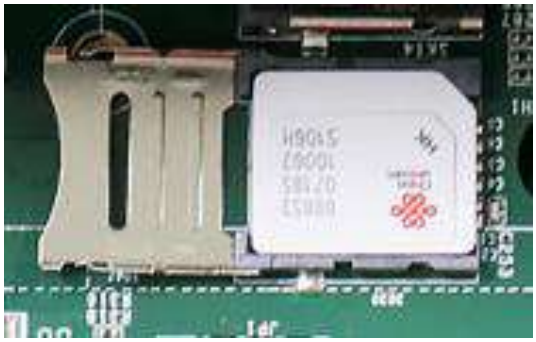

Flip-open the holder and place SIM

4. Flip the holder back onto the SIM card and push in the direction shown (LOCK) to lock-in the SIM card into the slot.

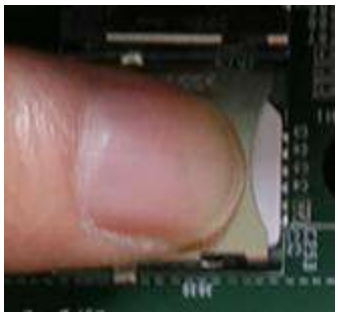

5. Insert the M.2 B key module on a 45 degree angle and secure with a screw. To open the SIM slot, slide the micro SIM cover in the direction shown and flip open the slot.

Insert on a 45° angle

Secure with a M2.5 P-head screw

6. To install the antenna onto the system enclosure, clip on the IPEX-to-SMA cable to the module and secure the antenna to the side panel (refer to the module's manual for clip-on connection).

Clip on the IPEX-to-SMA cable

> NOTE
>
> *If the module is installed after initial purchase, you may need to return the unit to Neousys Technology or an authorized distributor for SMA antenna installation.*

7. Remove the protective film on the thermal pad.

8. Reinstall the heatspreader.

Place heatsink back on the modules

Secure with screws indicated

9. Reinstall the enclosure.

   If you need to install other components, please refer to respective sections.

3.3 Reinstalling the Enclosure

1. Ensure the O-ring is properly seated in the groove.

2. With the O-ring seated in the groove, place the touch screen panel onto the enclosure.

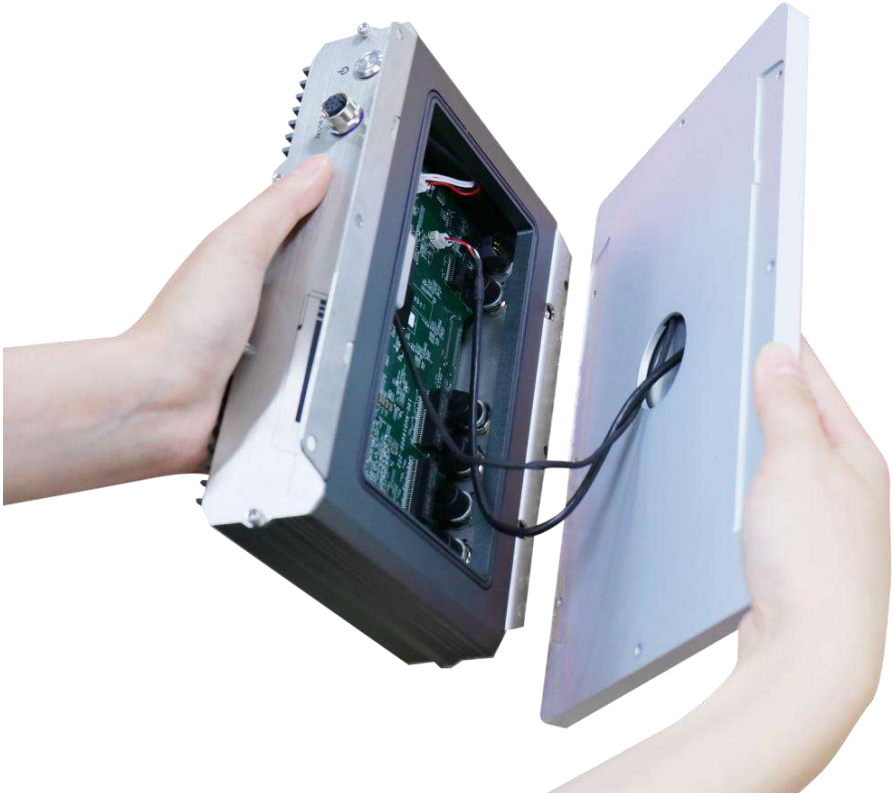

NOTE

Please make sure the O-ring is seated properly in the groove to ensure the system's IP66 functionality.

3. Secure the touch screen panel onto the enclosure with screws indicated.

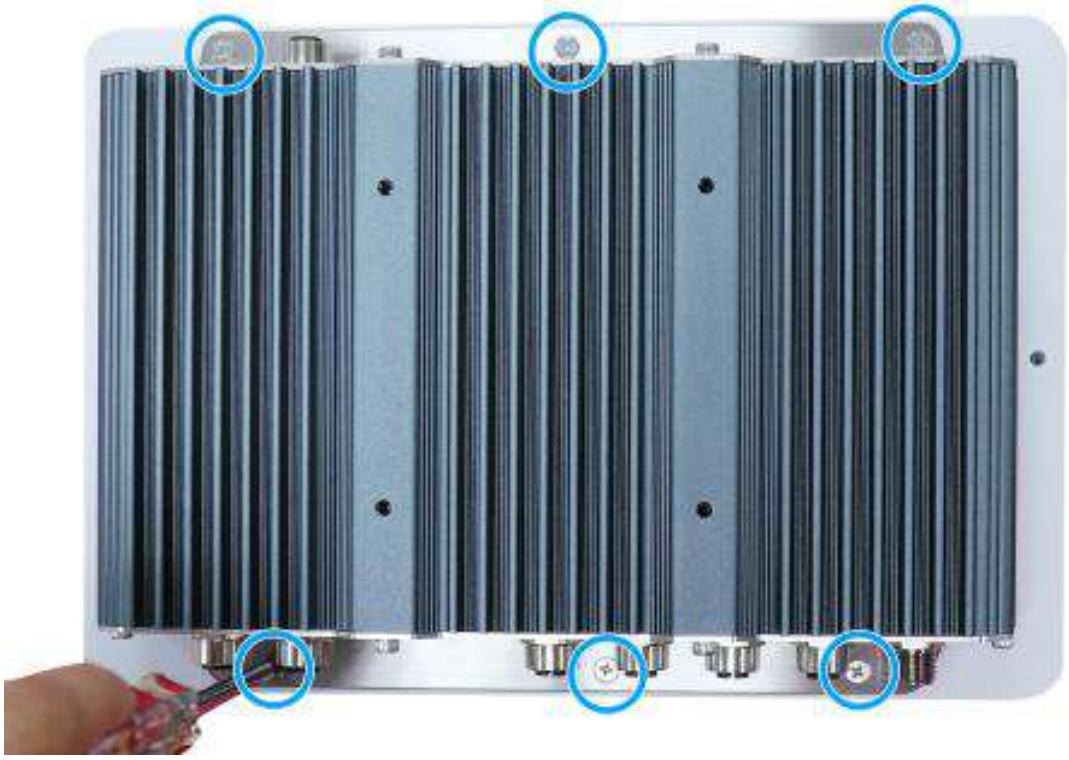

NOTE

Please secure each screw with a torque range of 8.1 – 9.9 kgf for waterproof capability.

3.4 Mounting the System

The system is compliant with standard VESA 75 x75 mm mounting specifications. The mounting threads can be found on the heatsink side of the system.

1. VESA 75 x75 mm mounting threads on the heatsink.

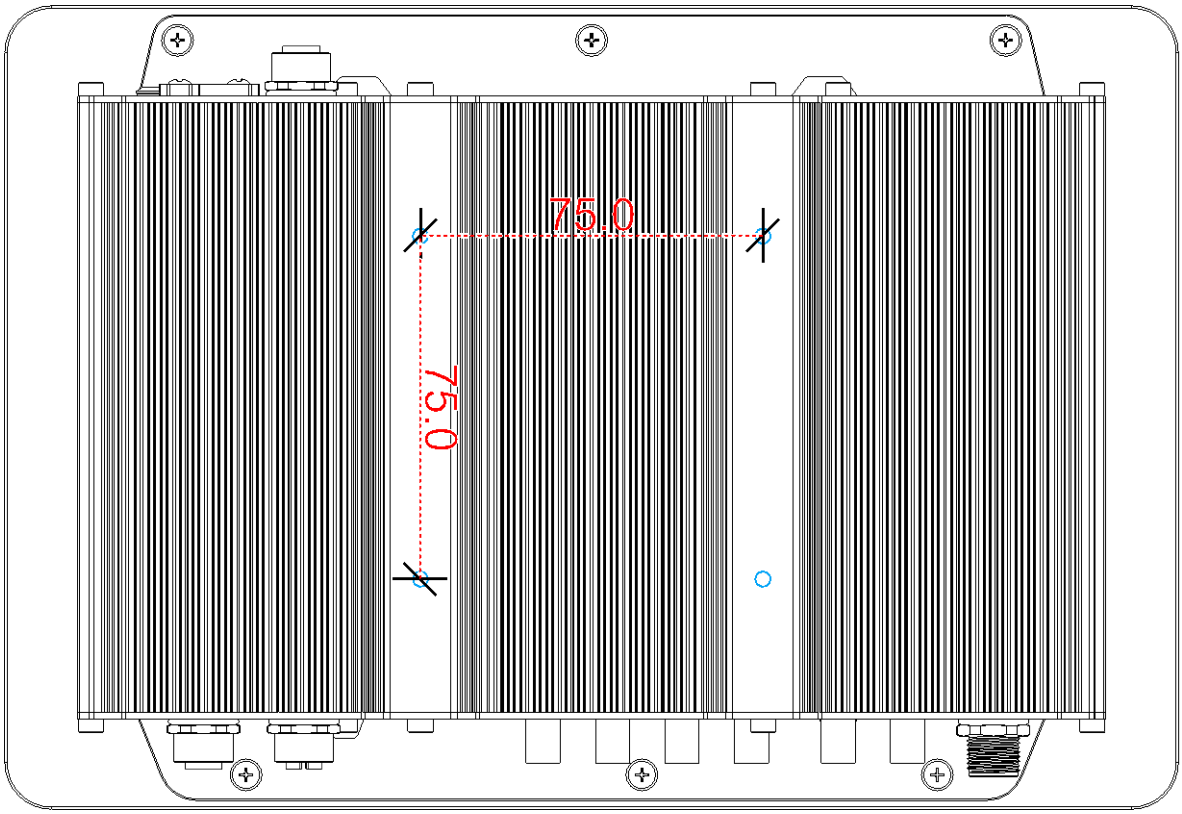

3.5 Powering on the System

The system can be powered on using the power button. This is the simplest way to turn on your system. The power button on the side panel is a non-latched switch and behaves as the ATX-mode on/off control. With DC power connected, pushing the power button will turn on the system and the PWR LED indicator will light up. Pushing the button when system is on will turn off the system. If your operating system supports ATX power mode, pushing the power button while the system is in operation will result in a pre-defined system behavior, such as shutdown or hibernation.

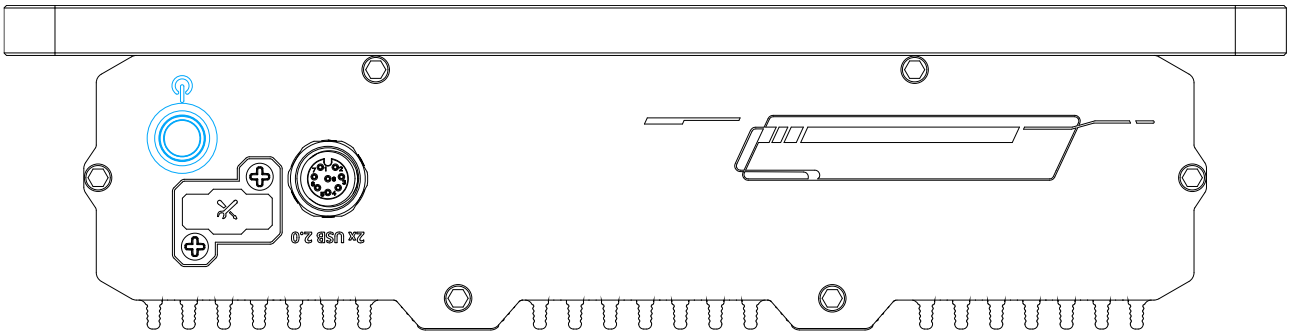

4 Ignition Power Control

The ignition power control module for in-vehicle applications is an MCU-based implementation that monitors the ignition signal and reacts to turn on/off the system according to predefined on/off delay. Its built-in algorithm supports other features such as ultra-low power standby, battery-low protection, system hard-off, etc. In this section, we'll illustrate the principle of ignition power control and operation modes.

4.1 Principles of Ignition Power Control

The concept of ignition power control module is to control the timing correlation between ignition signal and system power status. A typical timing correlation is described in following diagram.

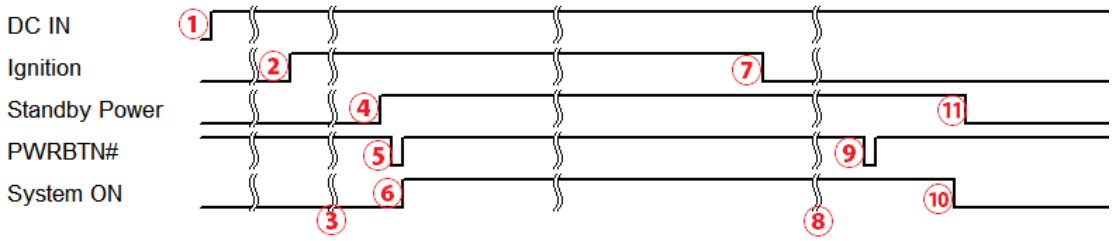

1. When DC power is supplied to the system, MCU starts to periodically detect ignition signal. Note that only MCU is working at this moment and the overall power consumption is less than 2 mW.
2. Ignition signal is active (both 12VDC and 24VDC ignition signals are accepted).
3. MCU starts to count a pre-defined power-on delay.
4. Once power-on delay expired, MCU turns on necessary standby power for the system (3.3VSB & 5VSB).
5. A PWRBTN# pulse is then issued to turn on the system (equivalent to one pressing the power button on the front panel).
6. The system is booting and becomes operational.
7. After a period of time, the ignition signal becomes inactive.
8. MCU starts to count a pre-defined power-off delay.
9. Once power-off delay expired, another PWRBTN# pulse is issued to perform a soft-off for the system (ex. a normal shutdown process for Windows system).
10. The system is completely shut down.
11. As MCU detects system is off, it turns off the standby power for the system, and operates in low power mode again (< 2mW power consumption).

4.1.1 Additional Features of Ignition Power Control

In addition to the typical timing correlation, the ignition power control module offers additional features to provide additional reliability for in-vehicle applications.

- **Low battery detection**

  The ignition power control module continuously monitors the voltage of DC input when the system is operational. If input voltage is less than 11V (for 12VDC input) or less than 22V (for 24VDC input) over a 60-second duration, it will shut down the system automatically.

- **Guarded power-on/ power-off delay duration**

  If ignition signal goes inactive during the power-on delay duration, the ignition power control module will cancel the power-on delay process and go back to idle status. Likewise if ignition signal goes active during the power-off delay duration, the ignition power control module will cancel the power-off delay process and keep the system running.

- **System hard-off**

  In some cases, system may fail to shutdown via a soft-off operation due to system/ application halts. The ignition power control module offers a mechanism called “hard-off” to handle this unexpected condition. By detecting the system status, it can determine whether the system is shutting down normally. If not, the ignition power control module will force cut-off the system power 10 minutes after the power-off delay duration.

- **Smart off-delay**

  The ignition power control module offers two modes (mode 13 & mode 14) which have very long power-off delay duration for applications require additional off-line time to process after the vehicle has stopped. In these two modes, the ignition power control module will automatically detect the system status during the power-off delay duration. If the system has shutdown (by the application software) prior to power-off delay expiring, it will cut off the system power immediately to prevent further battery consumption.

4.1.2 Wiring Ignition Signal

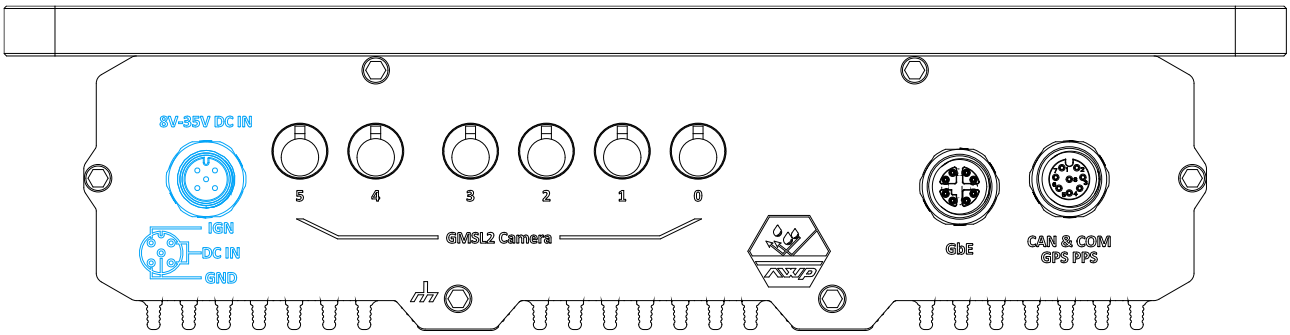

To have ignition power control for in-vehicle usage, you need to supply IGN signal to the system. The IGN input is located on the M12 L-coded 5-pin connector (shared with DC power input). For in-vehicle ignition control wiring, please do the following:

1. Connect car Battery + line (12V for sedan, 24V for bus/ truck) to V+.
2. Connect car Battery -/ GND line to GND.
3. Connect ACC line to IGN.

WARNING

Please make sure the voltage of DC power is correct before you connect it to the system.
Supplying a voltage over 35V will damage the system.
Please make sure your DC power source and IGN signal share the same ground.

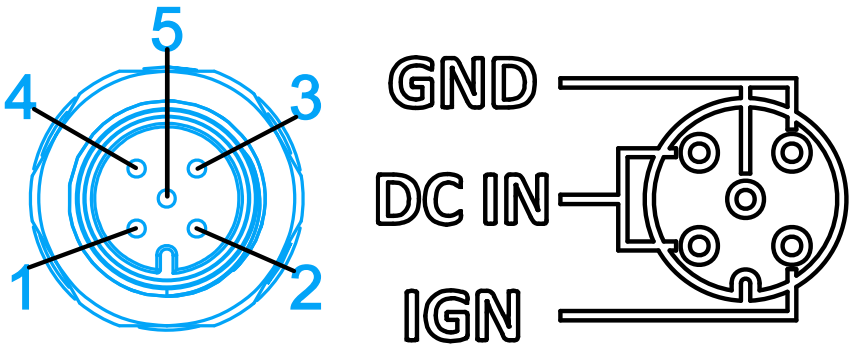

Pin No.	Signal	Wire color
1	V+	
2	IGN	
3	GND	
4	V+	
5	GND	

4.1.3 Operation Modes of Ignition Power Control

You can use the rotary switch to configure the operation mode. The system offers 16 (0~15) operation modes with different power-on/power-off delay configurations. Please refer to the section "Disassembling the system" to gain access to the rotary switch.

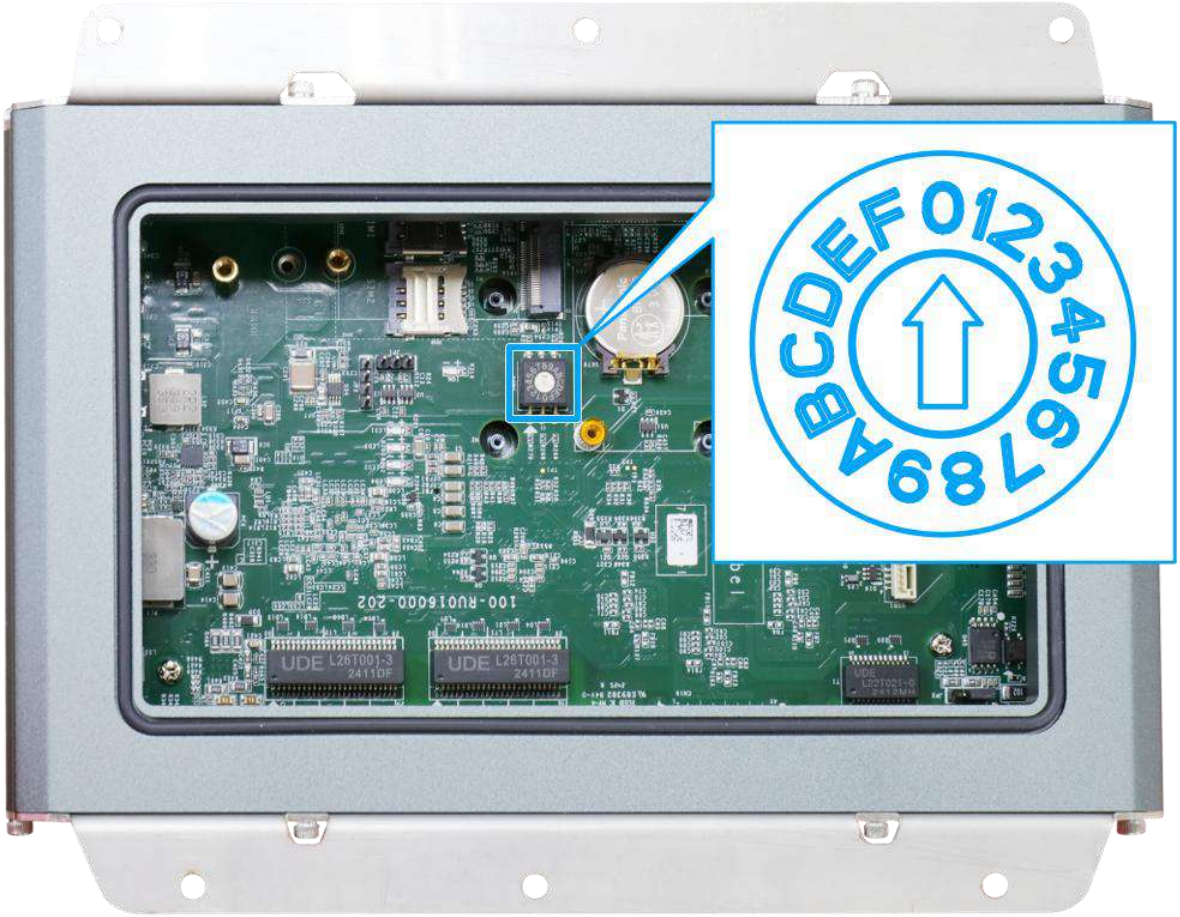

- **Mode 0**

Mode 0 is the ATX mode without power-on and power-off delay. User can only use the power button on the front panel to turn on or turn off the system.

Mode	Power-on Delay	Power-off Delay	Hard-off Timeout
0	N/A	N/A	N/A

- **Mode 1**

Mode 1 is AT mode without power-on and power-off delay. The system automatically turns on when DC power is applied. A retry mechanism is designed to repeat the power-on cycle if the system fails to boot up.

Mode	Power-on Delay	Power-off Delay	Hard-off Timeout
1	N/A	N/A	N/A

- **Mode 2**

Mode 2 is designed to have a very minor power on/ off delay of 160ms for applications that requires the system to start up almost at the same as the rest of the equipment it is working in collaboration with.

Mode	Power-on Delay	Power-off Delay	Hard-off Timeout
2	160ms	160ms	10 minutes

- **Mode 3 ~ Mode 12**

Mode 3 ~ Mode 12 have various power-on delay and power-off delay. Each mode supports a hard-off timeout of 10 minutes.

Mode	Power-on Delay	Power-off Delay	Hard-off Timeout
3	10 seconds	10 seconds	10 minutes
4	10 seconds	1 minute	10 minutes
5	10 seconds	5 minutes	10 minutes
6	30 seconds	1 minute	10 minutes
7	30 seconds	5 minutes	10 minutes
8	30 seconds	10 minutes	10 minutes
9	3 minutes	1 minute	10 minutes
10 (A)	3 minutes	10 minutes	10 minutes
11 (B)	3 minutes	30 minutes	10 minutes
12 (C)	10 minutes	30 minutes	10 minutes

- **Mode 13 (D) / Mode 14 (E)**

Mode 13 and Mode 14 are ignition power control modes with very long power-off delay. Both modes support the feature of “smart off-delay”, which automatically detect system status during power-off delay duration and cut off system power if system is off in prior to power-off delay expired.

Mode	Power-on Delay	Power-off Delay	Hard-off Timeout
13 (D)	30 seconds	2 hours	10 minutes
14 (E)	3 minutes	2 hours	10 minutes

- **Mode 15 (F)**

Mode 15 is reserved.

5 Reflashing the System

The system is shipped with JetPack 5.x installed as a turnkey solution. If you are familiar and experienced with the platform, you can skip this section and start your development.

This section will show you how to reflash the system with a pre-built system image by Neousys. Just like Jetson Orin NX Developer Kit, the system can't install on its own. In other words, you will need another computer, **Host Machine**, enter recovery mode and reflash the system using a USB Type-A/ Type-C to Type-C cable.

5.1 Accessing the Port

1. To reflash/ recover the system, the Type-C port can be found behind the port cover (indicated in **blue**), by removing the screws (indicated in **red**).

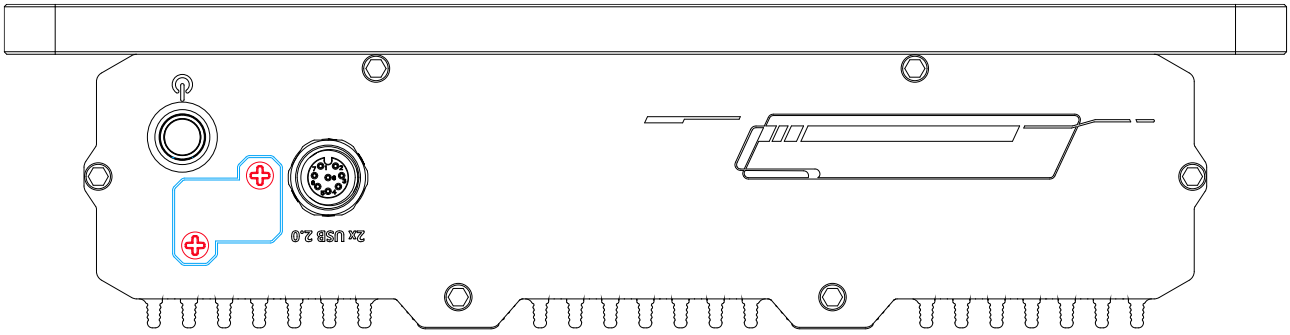

2. Simply plug in the Type-C cable to complete the connection.

5.2 Reflash/ Recovery

1. For detailed reflash process procedure, please refer to this link.

2. When done recovering/ reflashing, disconnect the Type-C cable from the system, and secure the port cover. Note that the port cover MUST be secured in the specific orientation shown, or it will lose it waterproof capability.

3. Secure the port cover with screws using a torque range of 2.7 to 3.3 kgf.